www.freeservicemanuals.info

SL-C9E

ADJUSTMENT MANUAL

AEP Model
UK Model
E Model

August, 1982

711D CHASSIS

Also refer to SERVICE MANUAL.

Beta
VIDEO CASSETTE RECORDER
SONY®

MICROFILM

Consumer VIDEO

www.freeservicemanuals.info

TABLE OF CONTENTS

1. PREPARATION FOR MECHANICAL SECTION CHECK, ADJUSTMENT, AND REPLACEMENT

1-1. Removal of the Case 3
1-2. Removal of TU-21, RR-1 Boards 4
1-3. Operation without Cassette Compartment Installed . . . 5
1-3-1. Completing Threading without Cassette, under FL Cassette Compartment Removed 5
1-3-2. Playback without Cassette Installed 6
1-3-3. Record Mode without Cassette Installed 6
1-4. List of Service Units and Tools 7

2. PERIODIC CHECK AND MAINTENANCE

2-1. Maintenance after Repair 8
2-1-1. Rotary Head Disc Assembly 8
2-1-2. Cleaning of the Tape Transportation System 8
2-1-3. Cleaning of the Drive System 8
2-2. Periodic Check Items 8

3. CHECK, ADJUSTMENT, AND REPLACEMENT PROCEDURES

3-1. Replacement of Rot Head Disc Assembly 9
3-1-1. Removal of Rotary Head Disc Assembly 9
3-1-2. Replacement 9
3-2. Video Head Dihedral Adjustment 9
3-3. Replacement and Adjustment of Drum Assembly 10
3-3-1. Replacement 10
3-3-2. Motor Clearance Adjustment when Replacing Drum Assembly 12
3-4. Replacement and Adjustment of Capstan Motor 12
3-4-1. Removal of the Capstan Motor 12
3-4-2. Perpendicular Adjustment of Capstan Shaft 13
3-5. Removal of Tension Pick-up Assembly 13
3-6. Removal of FL Cassette Compartment Assembly 14
3-7. Adjustment of FL Cassette Compartment Assembly . . . 15
3-7-1. Mounting of FL Cassette Compartment Assembly . . 15
3-7-2. Check and Adjustment of Cassette In Switch Operation 15
3-7-3. Check and Adjustment of Cassette Up Switch Operation 16
3-7-4. Check and Adjustment of Cassette Down Switch Operation 17
3-7-5. Check and Adjustment of Cassette Door Assembly and Rail Clearance 17
3-7-6. Positioning of Left/Right Gears when Assembling . . 18
3-8. Removal of Reel Motor 18
3-9. Unthreading Check 19
3-10. S Threading Ring Replacement and Adjustment 20
3-10-1. Preparation for Removal of S Threading Ring 20
3-10-2. Removal of S Threading Ring 22
3-10-3. Checking Slider Stopper Mounting 23
3-10-4. Replacement of S Threading Ring 23
3-11. Adjustment of No. 2 and No. 3 Guide Heights 24
3-12. Check and Adjustment of Pinch Press Limiter Clearance 24
3-13. Brake Operation Check and Brake Solenoid Adjustment 25
3-14. Check and Adjustment of Microswitch Position 26
3-14-1. Check and Adjustment of Threading End Switch (TE Switch) Position 26
3-14-2. Check and Adjustment of Unthreading End Switch (UTE Switch) Position 27
3-15. Forward/Back Tension Measurement 28

4. TAPE PATH ADJUSTMENT

4-1. Tracking Adjustment 29
4-1-1. Preparation 30
4-1-2. Entrance Side Adjustment 30
4-1-3. Exit Side Adjustment 32
4-1-4. Reverse Waveform Confirmation 32
4-2. Adjustment for Removal or Replacement of the ACE Assembly 33
4-2-1. Tracking Adjustment 33
4-2-2. Audio Head (ACE Assembly) Azimuth Adjustment . 34
4-2-3. CTL Head (ACE Assembly) Position Adjustment . . 34
4-2-4. Audio Head (ACE Assembly) Height Adjustment . . 34
4-3. Adjustment for Removal or Replacement of the Capstan Motor 35
4-4. Thin tape running check method during tape path adjustment 35

5. ELECTRICAL ALIGNMENT

5-1. Power Supply Check 39
5-2. System Control Check 39
5-3. Servo System Alignment 40
5-3-1. Reel Servo System Alignment 40
5-3-2. Drum and Capstan Servo System Alignment. 40
5-3-3. Variable Speed Servo Adjustment. 43
5-4. Video System Alignment. 46
5-5. Adjustment of the Audio Section. 52
5-6. Adjustment of the TUNER block. 54
5-7. Adjustment of the TIMER block 54

www.freeservicemanuals.info

SECTION 1
PREPARATION FOR MECHANICAL SECTION CHECK, ADJUSTMENT, AND REPLACEMENT

1-1. REMOVAL OF THE CASE

1-1-1. Removal of the Case and Front Panel

1) Unscrew the four screws (1).

2) Remove upper case (2) in the direction of arrow (A).

3) Unscrew the seven screws (3) on the lower case assembly (4) and remove it.

4) Unscrew the five front panel screws (5).

5) Remove the front panel assembly by pulling in the direction of arrow (B).

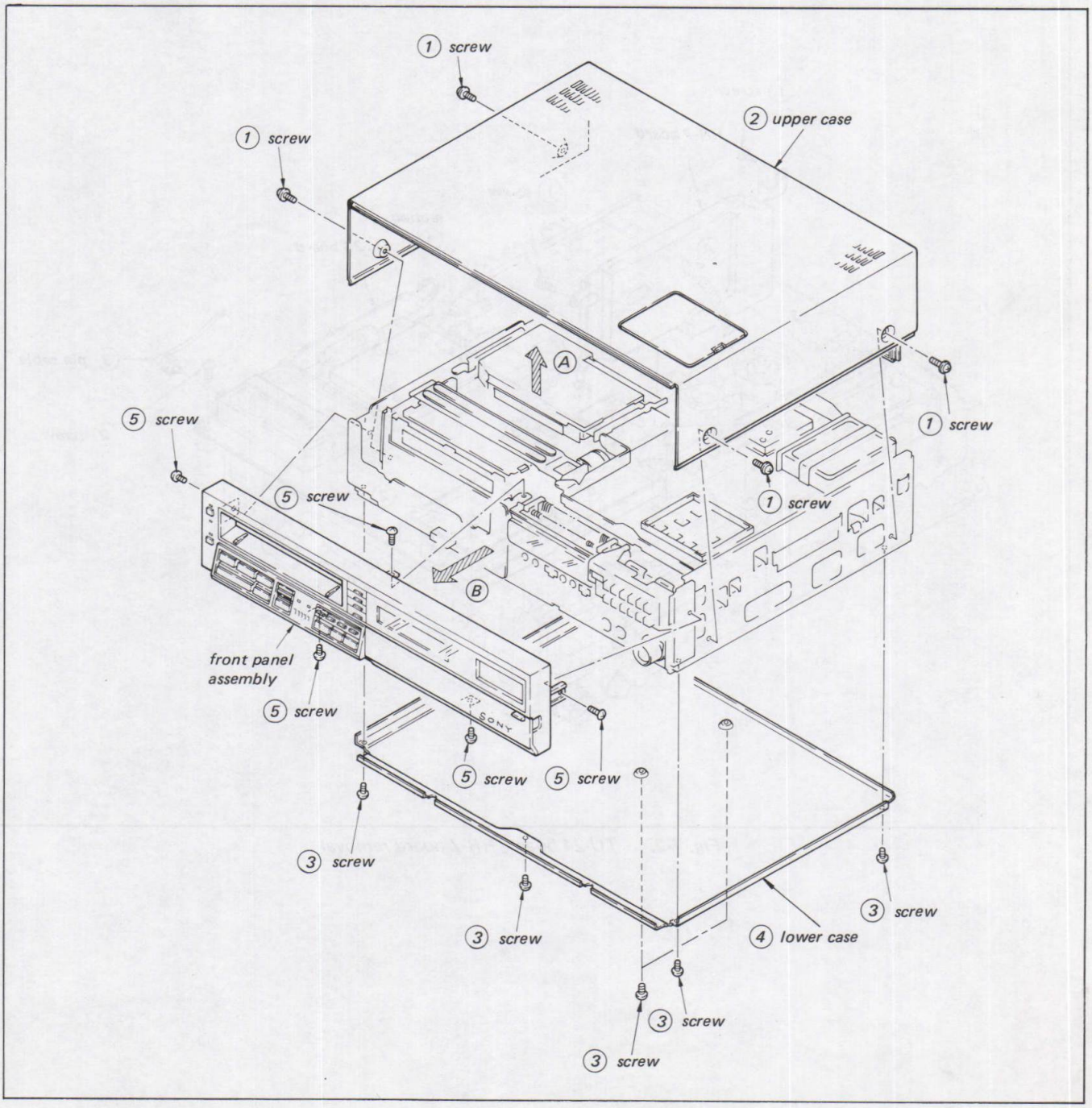

Fig. 1-1.

www.freeservicemanuals.info

1-2. REMOVAL OF TU-24, RR-7 BOARDS

1) Unscrew the two screws (1) on the RR-7 board.

2) Open RR-7 board in the direction of arrow (A) .

3) Unscrew the three screws (2) holding TU-24 board.

4) Unscrew the cabe, pin (3) .

5) Unfasten sections (a) , (b) .

6) Move TU-24 board in the direction of arrow (B) to remove.

Note: The TU-24 board is removed with the connectors on the reverse side of the board still attached. Do not move more than necessary.

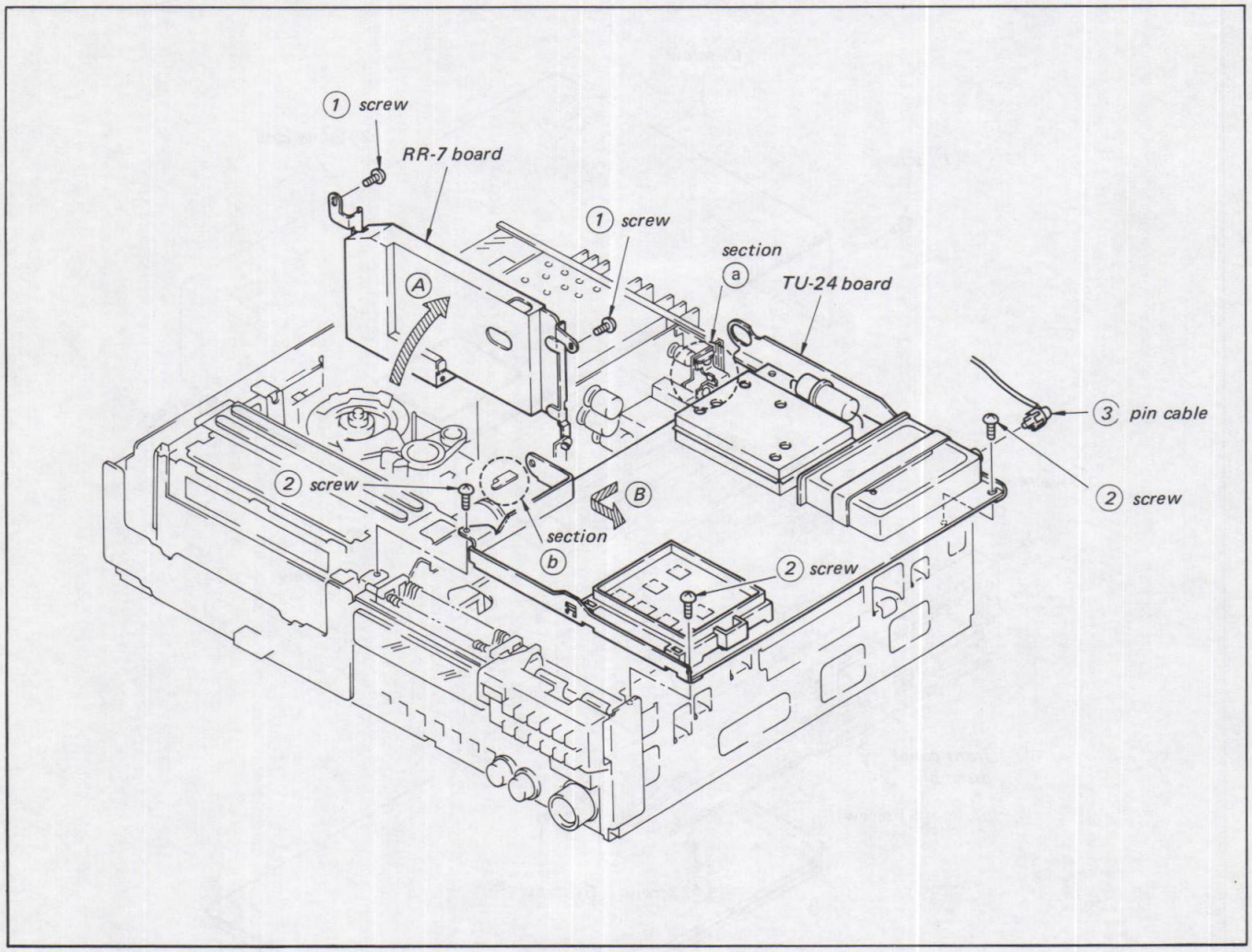

Fig. 1-2. TU-24 board, RR-7 board removal

www.freeservicemanuals.info

1-3. OPERATION WITHOUT CASSETTE COMPARTMENT INSTALLED

1-3-1. Completing Threading without Cassette, Under FL Cassette Compartment Removed (This state is called "STOP mode" in this guide.)

1) Place the FL cassette compartment on top of the TU-24 board. (Be sure to spread an insulation sheet over the board.)

Note: See 3-6 for removal of FL cassette compartment.

2) Connect the two connector harnesses. (RL-6 board CN511, CN512)

3) Insert a cassette into the FL cassette compartment and push in the direction of arrow Ⓐ.

[To EJECT in this state]

1) Press EJECT button.

2) Just before completion of unthreading, T slider assembly pushes unlock plate assembly in the direction of arrow ⓐ.

3) Since the unlock plate assembly is incomplete, because of the separated F.L cassette compartment, the unlock coupling plate under this compartment should be pulled toward ⓑ. This must be done during the final moments of unthreading to EJECT the cassette.

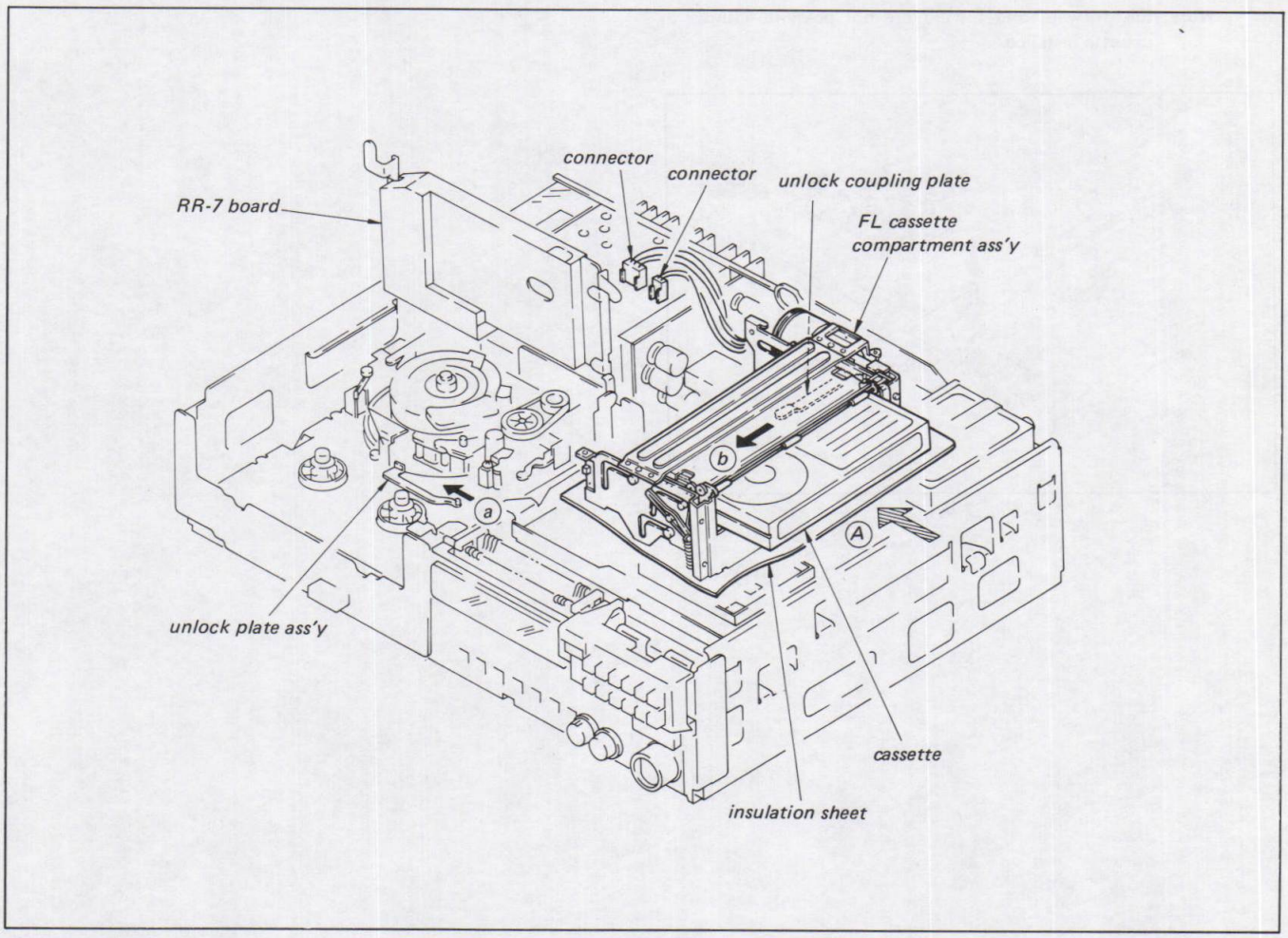

Fig. 1-3.

www.freeservicemanuals.info

1-3-2. Playback without Cassette Installed

Press the playback button after setting the STOP mode in step 1-3-1.

1-3-3. Record Mode without Cassette Installed

1) Threading as explained in 1-3-1 and press the record proof switch as shown in Fig. 1-4.

2) Hold this switch down and press PAUSE button while pressing PLAY button.

3) This is PLAY PAUSE mode. Next press REC button to achieve REC PAUSE mode.

4) Press the PAUSE button to release PAUSE mode, and REC mode results.

Note: Fast-forward and rewind are not possible without a cassette installed.

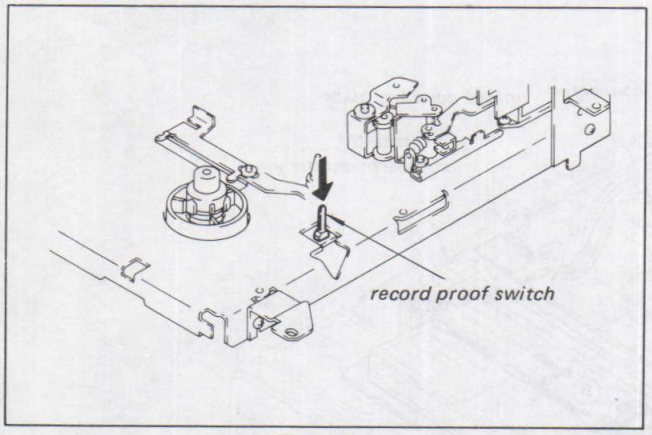

Fig. 1-4.

www.freeservicemanuals.info

1-4. LIST OF SERVICE UNITS AND TOOLS

Ref. No.	Name	Part No.	Fixture No.
J-1	Forward-Back Tension Measurement Tape	J-6080-003-C	SL-0003C
J-2	Parallel Plate	J-6086-750-A	SL-0657
J-3	Small Adj. Mirror	J-6080-029-A	SL-5052
	Spare Mirror	J-6080-030-1	
J-4	Alignment Tape	8-969-995-52	KR5-2H
J-5	Cleaning Fluid	Y-2031-001-0	
J-6	Thickness Gauge	9-911-053-00	
J-7	Cleaning chamois	Z-034-697-00	
J-8	Head Demagnetizer		
J-9	Lapping Tape	8-888-004-00	
J-10	Dihedral Adj. Screw	J-6080-013-1	SL-0013

J-1

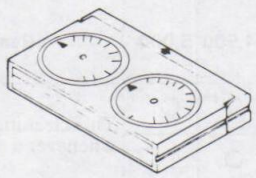

J-2

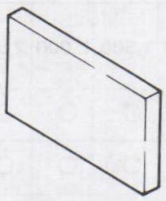

J-3

J-4

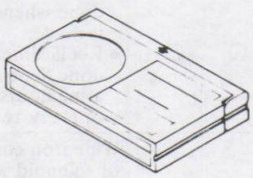

J-5

J-6

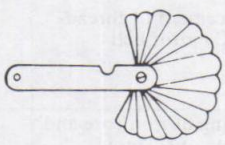

J-7

J-8

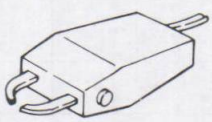

J-9

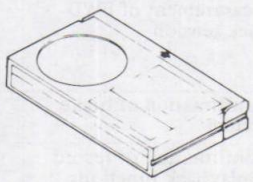

J-10

www.freeservicemanuals.info

SECTION 2
PERIODIC CHECK AND MAINTENANCE

The following maintenance and periodic checks are recommended to ensure optimum machine function and performance and to prolong machine and tape life.

2-1. MAINTENANCE AFTER REPAIR

Carry out maintenance work for the following items after repairing the machine regardless of the period of use.

2-1-1. Rotary Head Disc Assembly

1) Place a piece of chamois (tool Ref. No. J7) soaked in cleaning fluid (tool Ref. No. J5) lightly against the rotary drum assembly and clean the rotary head disc assembly by slowly rotating it by hand. (Important-Do not clean by rotating with the motor on.)

2) Do not clean the head tip by moving the chamois in a vertical direction. This may damage the head tip.

2-1-2. Cleaning of the Tape Transportation System

Clean the tape contact surfaces, such as the tape guide, drum assembly surfaces, capstan, and pinch roller using cleaning piece etc. soaked in cleaning fluid.

2-1-3. Cleaning of the Drive System

Clean the driving elements (threading motor belt, reel base surfaces, etc.) using a cloth soaked in cleaning fluid.

2-2. PERIODIC CHECK ITEMS

Carry out maintenance checks for the following items depending on the duration of use.

Maintenance & Check		Operating Hours (H) / Replacement Part No.	500	1,000	1,500	2,000	2,500	3,000	3,500	4,000	4,500	5,000	Remarks
Tape Trans-Portation System	Cleaning of tape transportation system		○	○	○	○	○	○	○	○	○	○	This cleaning must be done whenever a repair is made.
	Cleaning and degaussing of ACE ass'y		○	○	○	○	○	○	○	○	○	○	
	Cleaning & degaussing of video disk ass'y		○	○	○	○	○	○	○	○	○	○	The life of the head varies, depending on operational conditions and method.
Driving System	Replacement of threading DC motor belt		○	○	○	○	○	○	○	★	○	○	• This cleaning must be done whenever a repair is made. • Replacement must be done depending on operating hours on the table, or every two years.
	Cleaning of iron core and opening of solenoid		–	–	–	○	–	–	–	○	–	–	Wipe iron core and opening of solenoid with dry cloth.
Performance Confirmation	Abnormal sound		☆	☆	☆	☆	☆	☆	☆	☆	☆	☆	Adjust or replace the section which causes abnormal sound.
	Measurement of FWD back tension		–	☆	–	☆	–	☆	–	☆	–	☆	Confirmation must be made according to section Specified value: 45 ~ 48 g·cm (When measured with torque cassette tape)
	Confirmation of brake system		–	☆	–	☆	–	☆	–	☆	–	☆	Confirmation must be made according to section
	Confirmation of record & playback functions		☆	☆	☆	☆	☆	☆	☆	☆	☆	☆	Perform the confirmation whenever repair is made.

○ Cleaning ★ Replacement ☆ Confirmation

Note: When overhauling, refer to the above for part replacement.

www.freeservicemanuals.info

SECTION 3
CHECK, ADJUSTMENT, AND REPLACEMENT PROCEDURES

3-1. REPLACEMENT OF ROTARY HEAD DISC ASSEMBLY

3-1-1. Removal of Rotary Head Disc Assembly

1) Unscrew the two screws (1) holding the damper assembly and remove it.

2) Unscrew hexagonal socket bolt (2) with an allen wrench.

3) Unscrew the two screws (3) and remove the upper drum assembly.

Note: Remove the upper drum, without moving the adjust plate. Be very careful not to move the adjust plate, or tape path will be affected.

4) Unsolder the rotary head disc relay board. (Six blue and white lead wires)

5) Unscrew the two hexagonal socket bolts (4) and remove the rotary head disc assembly.

Note: Be very careful not to touch the head tip, or touch it against anything.

3-1-2. Replacement

1) Position the rotary head disc paying attention to the direction of the blue and white lead wires.

2) Tighten the hexagonal socket bolts (4) and solder the lead wires.

Note: Solder securely, being careful not to break the lead wires.

3) Be careful not to move the adjust plate, as when removing the upper drum. Lightly tighten the screws (3), clamp hexagonal socket bolt (2), then securely tighten the screws (3).

Caution: Be careful not to touch the head tip when replacing the drum.

Note: When replacing the rotary drum head, it may be difficult to remove it from the head disc. In this event, follow the procedure below. (Fig. 3-2)

i) Unscrew hexagonal socket bolts (3) on the head disc.

ii) At this point, if it is difficult to remove the head disc, place the two screws removed in step i) in the two holes 90° away from the removal holes, and screw them in alternately, and gradually. The head disc will be lifted up by the force of the hexagonal socket bolts and can be removed easily.

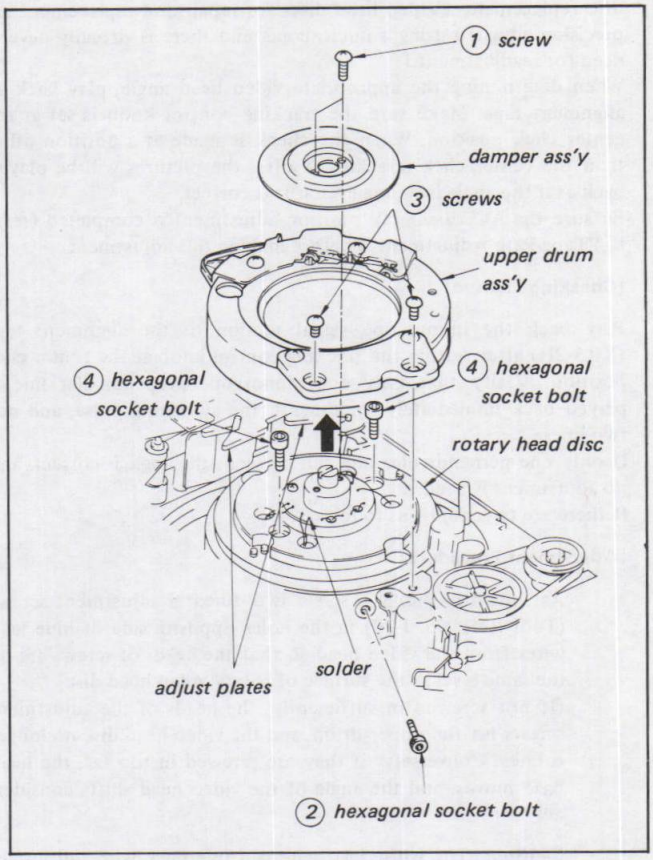

Fig. 3-1.

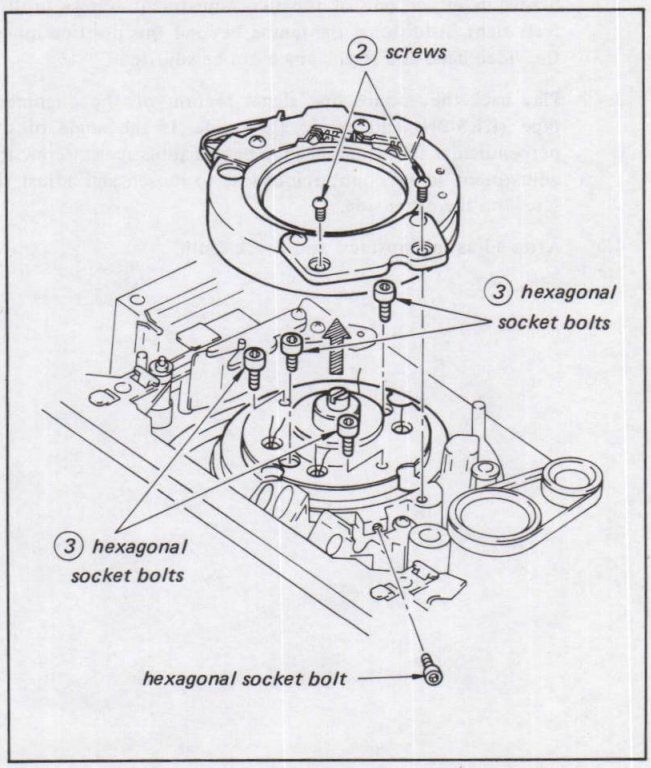

Fig. 3-2.

www.freeservicemanuals.info

3-2. VIDEO HEAD DIHEDRAL ADJUSTMENT

Generally this adjustment is not necessary except after video head disc replacement. (Video head discs for repair and replacement are precision adjusted using a microscope, and there is virtually never a need for readjustment.)
When determining the appropriate video head angle, play back an alignment tape. Make sure the tracking control knob is set at the center click position. When the check is made at a position other than the center click (tracking is off), the pictures will be played back as if the angle is wrong even if it is correct.
Be sure the ACE assembly position adjustment is completed (refer to "Tape Path Adjustment") before making this adjustment.

[Checking Method]

Play back the monoscope signal section of the alignment tape (KR5-2H) after setting the tracking control knob at the center click position. Verify that only one monoscope perpendicular line is played back immediately underneath the switching pulse, and not two lines.
If only one perpendicular line can be seen, the angle is correct, and no adjustment is needed.
If there are two, adjust as follows.

[Adjustment Procedure]

1. As shown in Fig. 3-3, screw two dihedral adjustment screws (Tool Ref. No. J-10) in the holes opposite side of blue lead wires from the video head so that the heads of screws are on the same level as the surface of rotary video head disc.
   (If not screwed in sufficiently, the heads of the adjustment screws hit the upper drum, and the video head disc no longer rotates. Conversely, if they are screwed in too far, the head base moves, and the angle of the video head shifts considerably.)

   Caution: The white lead wire is a reference wire and should never be moved.

2. Screw in either one of the two adjustment screws until it feels tight. Additional tightening beyond this position moves the video head and so the angle can be adjusted.

3. Play back the monoscope signal section of the alignment tape (KR5-2H) and verify the angle. If the angle of the perpendicular line is larger than before adjustment, screw the adjustment screw counterclockwise to loosen and adjust the screw on the other side.

4. After adjusting, unscrew and check again.

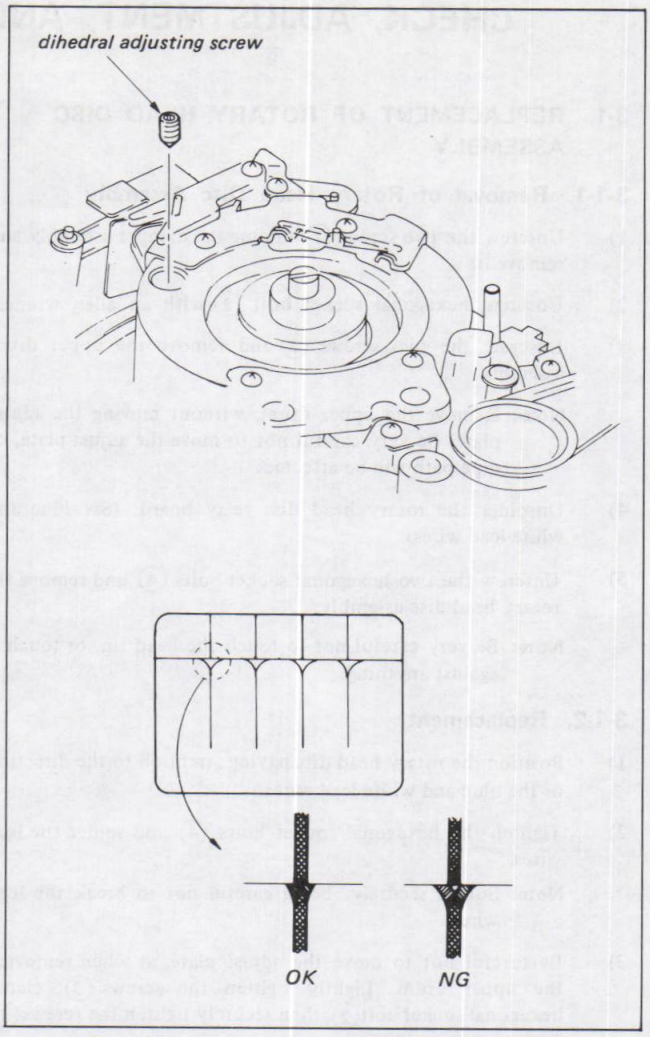

Fig. 3-3. Video head dihedral adjustment

www.freeservicemanuals.info

3-3. REPLACEMENT AND ADJUSTMENT OF DRUM ASSEMBLY

3-3-1. Replacement

1) Measure and record the two gaps between the upper drum tape holding section and the adjust plate (Ⓐ in Fig. 3-4). (Do not forget to do this, as the adjust plate mounting position affects the tape path.)

2) Unscrew the screws ① shown in Fig. 3-4. Remove the tape guide ground plate and adjust plates 1 and 2 .

3) Remove the connector, and three drum mounting screws, washers from the rear of the chassis and remove the drum assembly body.

4) Re-assemble the parts in reverse order.

5) Perform to "Tape Path Adjustment" after replacing the drum.

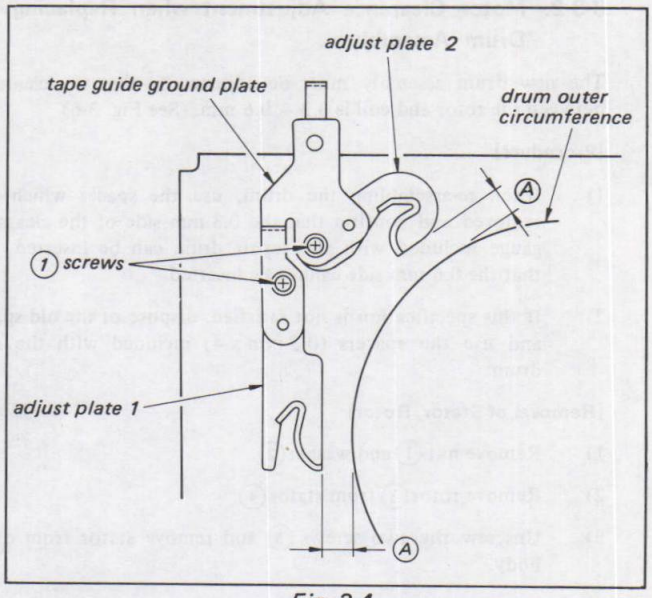

Fig. 3-4.

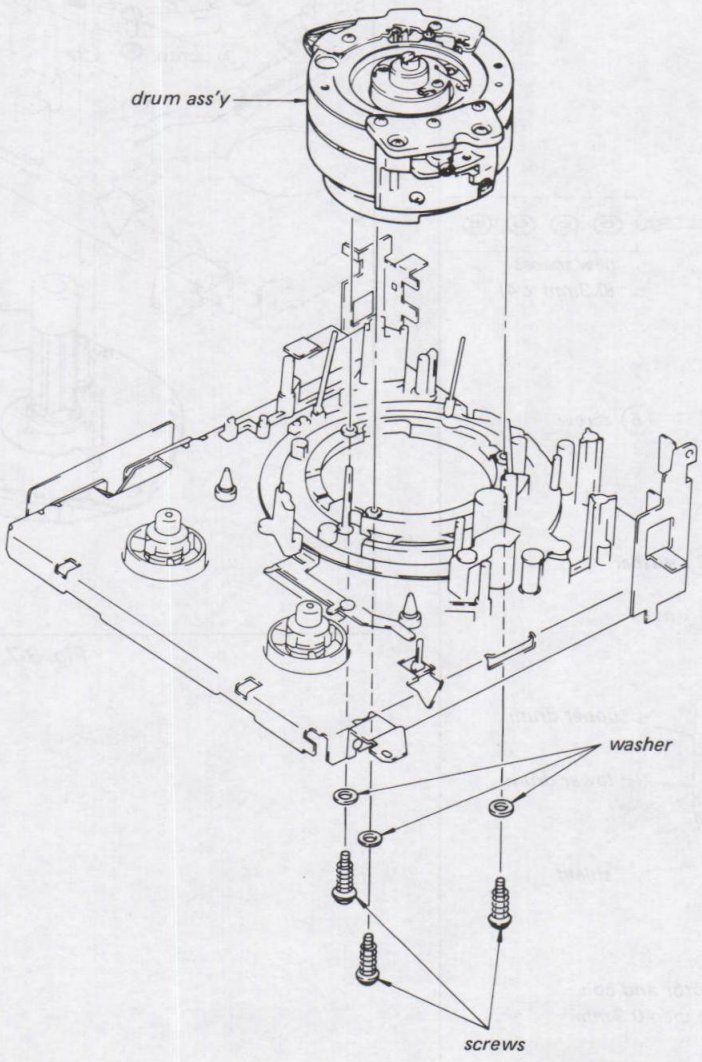

Fig. 3-5.

www.freeservicemanuals.info

3-3-2. Motor Clearance Adjustment when Replacing Drum Assembly

The new drum assembly must be adjusted so that the clearance between the rotor and coil is 0.3 – 0.6 mm. (See Fig. 3-6)

[Procedure]

1) When re-assembling the drum, use the spacer which was removed and confirm that the 0.3 mm side of the clearance gauge included with the repair drum can be inserted, and that the 0.6 mm side cannot be inserted.

2) If this specification is not satisfied, dispose of the old spacer and use the spacers (0.3 mm x 4) included with the new drum.

[Removal of Stator, Rotor]

1) Remove nut (1) and washer (2).

2) Remove rotor (3) from stator (4).

3) Unscrew the two screws (5) and remove stator from drum body.

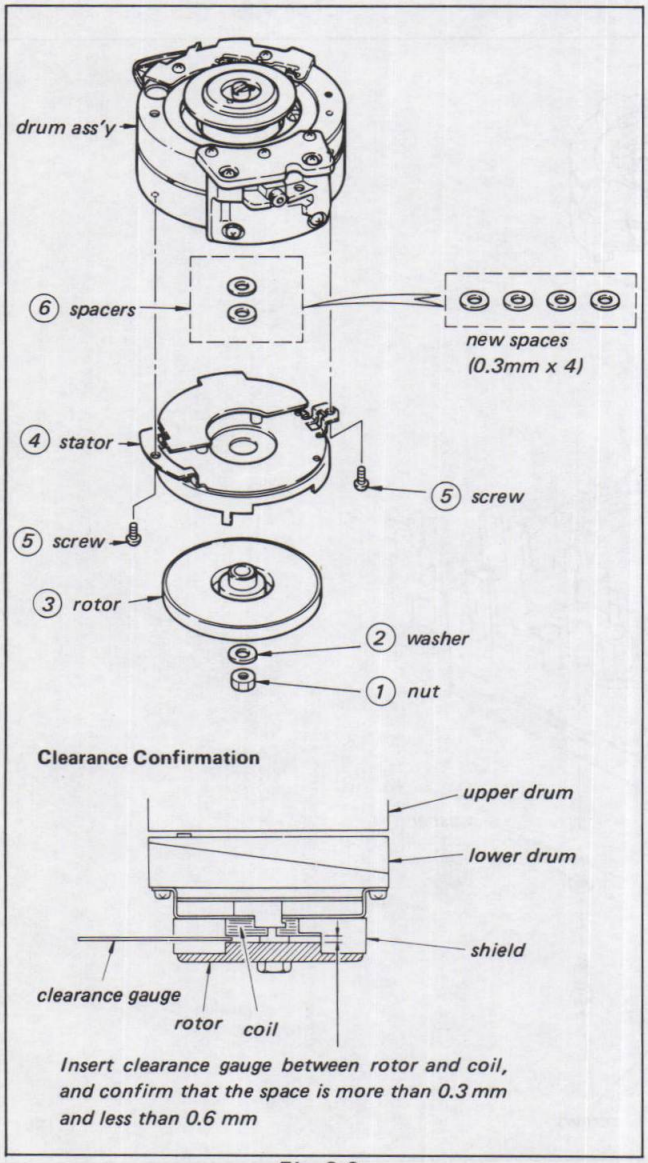

Fig. 3-6.

3-4. REPLACEMENT AND ADJUSTMENT OF CAPSTAN MOTOR

3-4-1. Removal of the Capstan Motor (Fig. 3-7)

Unscrew screws (1), (2), (3) and remove the capstan motor from the bottom of the mechanism chassis

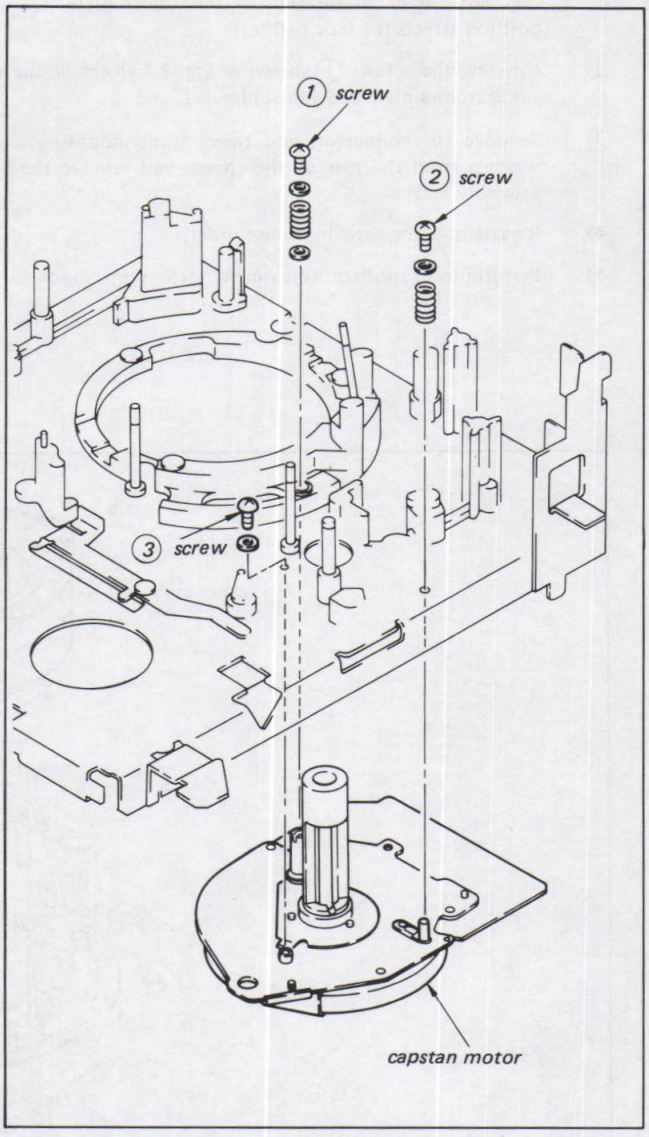

Fig. 3-7.

www.freeservicemanuals.info

3-4-2. Perpendicular Adjustment of Capstan Shaft

[Be sure to adjust as follows after the capstan motor has been replaced or removed]

1) Place parallel plate (Tool Ref. No. J-2) on No. 10 guide sleeve of the pinch press arm assembly perpendicularly, as shown in Fig. 3-8.

2) Loosen screw (1).

3) Rotate adjusting screw (2) and align the capstan shaft perpendicularly.

4) Tighten screw (1) and fix the capstan motor.

5) Adjust according to "Tape Path Adjustment".

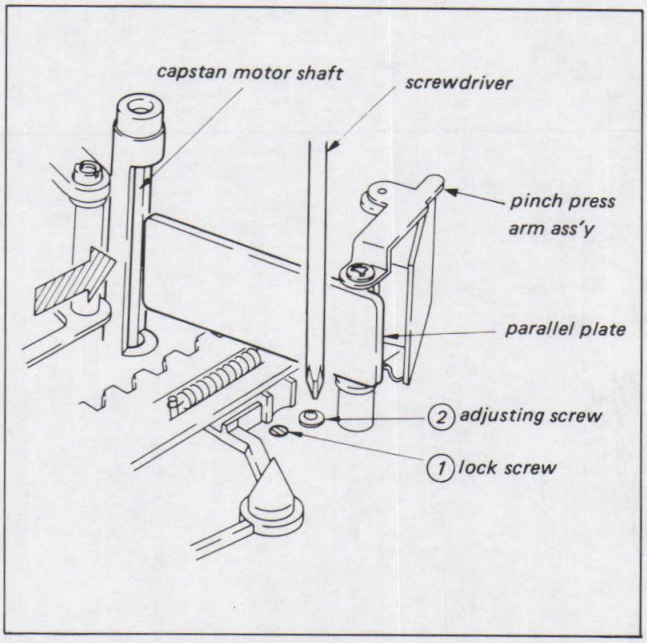

Fig. 3-8. Capstan motor shaft perpendicular adjustment

3-5. REMOVAL OF TENSION PICK-UP ASSEMBLY (Fig. 3-9)

1) Remove spring (1) and disengage hook (2) to pull out the tension pick-up assembly.

2) Disconnect the wire harness from the wire harness clamp and pull out the connector.

Caution: When replacing or removing the tension pick-up assembly, be sure to also adjust the back tension. See "Back Tension Check and Adjustment".

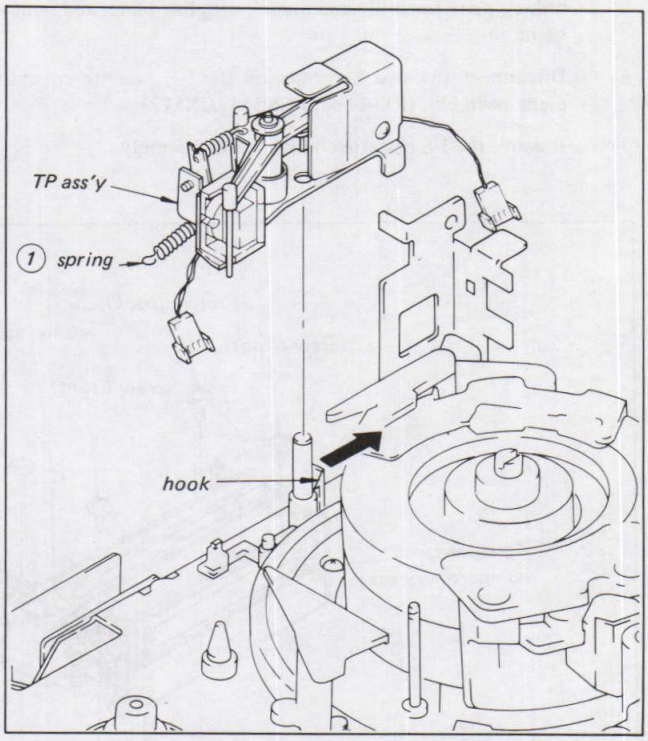

Fig. 3-9.

www.freeservicemanuals.info

3-6. REMOVAL OF FL CASSETTE COMPARTMENT ASSEMBLY

1) Insert a cassette and set cassette down state.

2) Unscrew the two front mounting screws on the FL cassette compartment assembly.

3) EJECT the cassette.

4) Unscrew the remaining two mounting screws (back).

5) Remove the washer stopper in the connecting section of the unlock plate assembly and unlock coupling plate, and remove them.

6) Disconnect the two harnesses on the FL cassette compartment assembly. (RL-6 board CN511, CN512)

7) Remove the FL cassette compartment assembly.

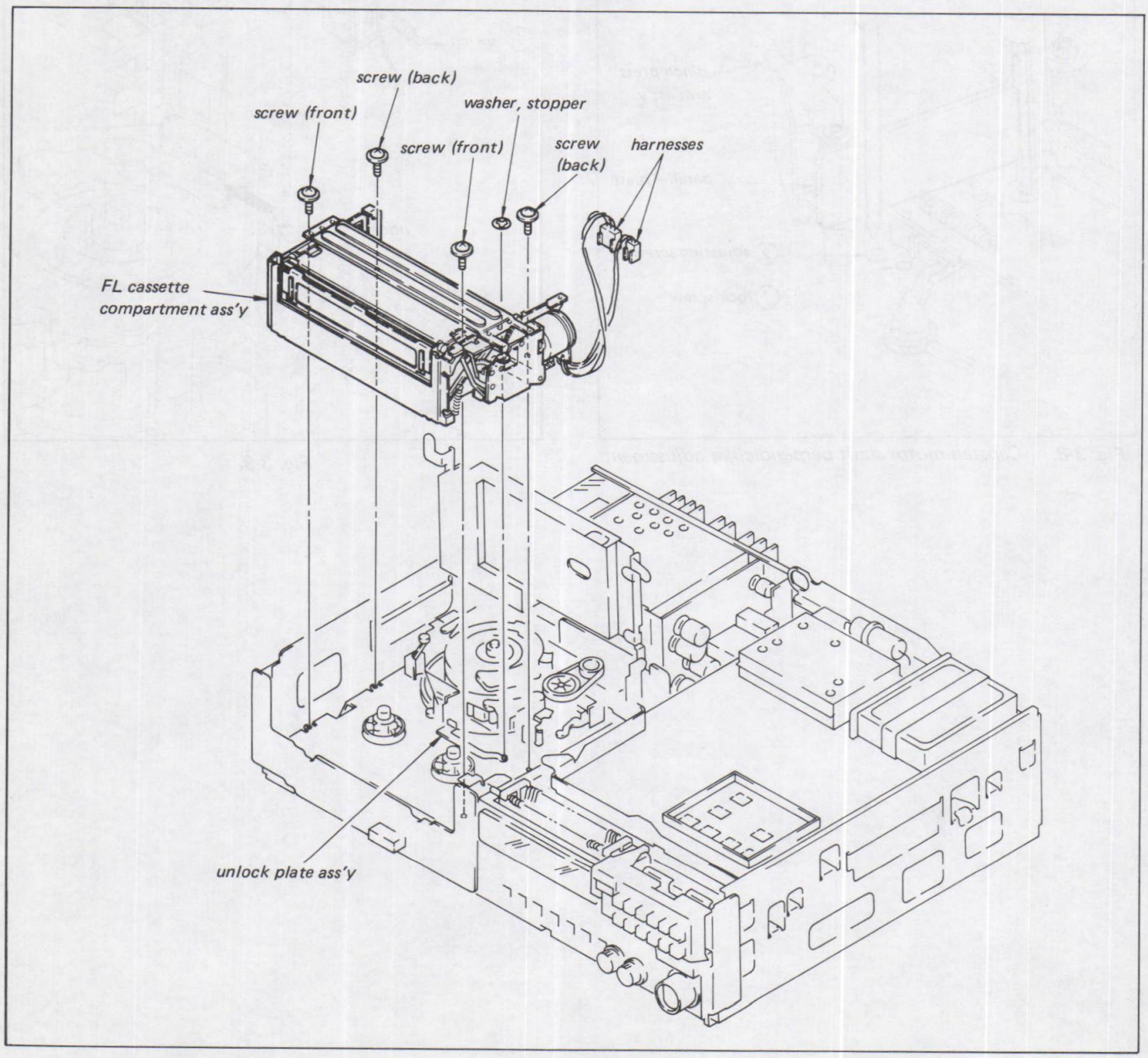

Fig. 3-10. Removal of FL cassette compartment assembly

www.freeservicemanuals.info

3-7. ADJUSTMENT OF FL CASSETTE COMPARTMENT ASSEMBLY

3-7-1. Mounting of FL Cassette Compartment Assembly (Fig. 3-11, 3-12)

1) Place the FL cassette compartment assembly in position on top of the mechanism chassis (in cassette up state).

2) Put the unlock plate assembly shaft through the hole in the unlock coupling plate, and install the washer stopper. (Fig. 3-12)

3) Lightly tighten the two back mounting screws of the FL cassette compartment.

4) Connect the two harnesses on the FL cassette compartment to the boards. (RL-6 board CN511, CN512) (See Fig. 1-3)

5) Insert a cassette and set cassette down state.

6) Lightly tighten the two front mounting screws.

7) Move the FL cassette compartment assembly back and forth over the mechanism chassis to set it in the proper position, and securely tighten the four mounting screws.

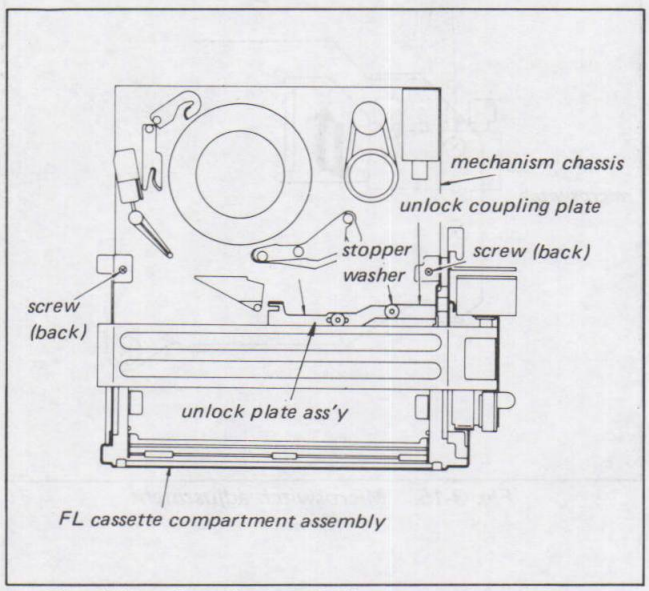

Fig. 3-11. Installation of FL cassette compartment assembly

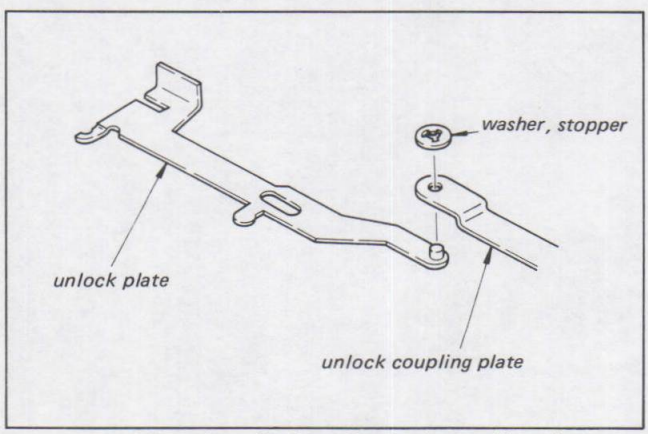

Fig. 3-12. Installation of unlock coupling plate

3-7-2. Check and Adjustment of Cassette In Switch Operation

[Check Procedure]

Confirm that the two microswitches on the left and right go on 0.6 – 1.2 mm before the cassette reaches its final position when inserted in the FL cassette compartment assembly.

[Adjustment Procedure]

Loosen the screw on the microswitch and move the microswitch in the directions of the arrows.

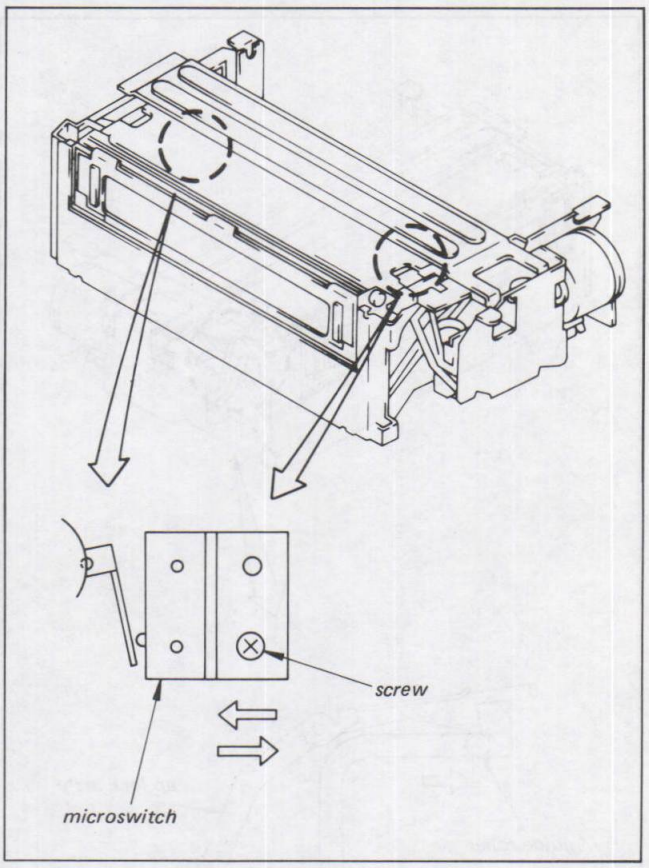

Fig. 3-13.

www.freeservicemanuals.info

3-7-3. Check and Adjustment of Cassette Up Switch Operation

[Check Procedure] (refer to Fig. 3-14)

Confirm that the microswitch goes on between when the UP lock assembly goes over the guide roller and before it drops down when the FL cassette compartment assembly motor is rotated slowly in cassette up direction.

[Adjustment Procedure] (refer to Fig. 3-15)

Loosen the screw on the microswitch and move the switch up and down to adjust.

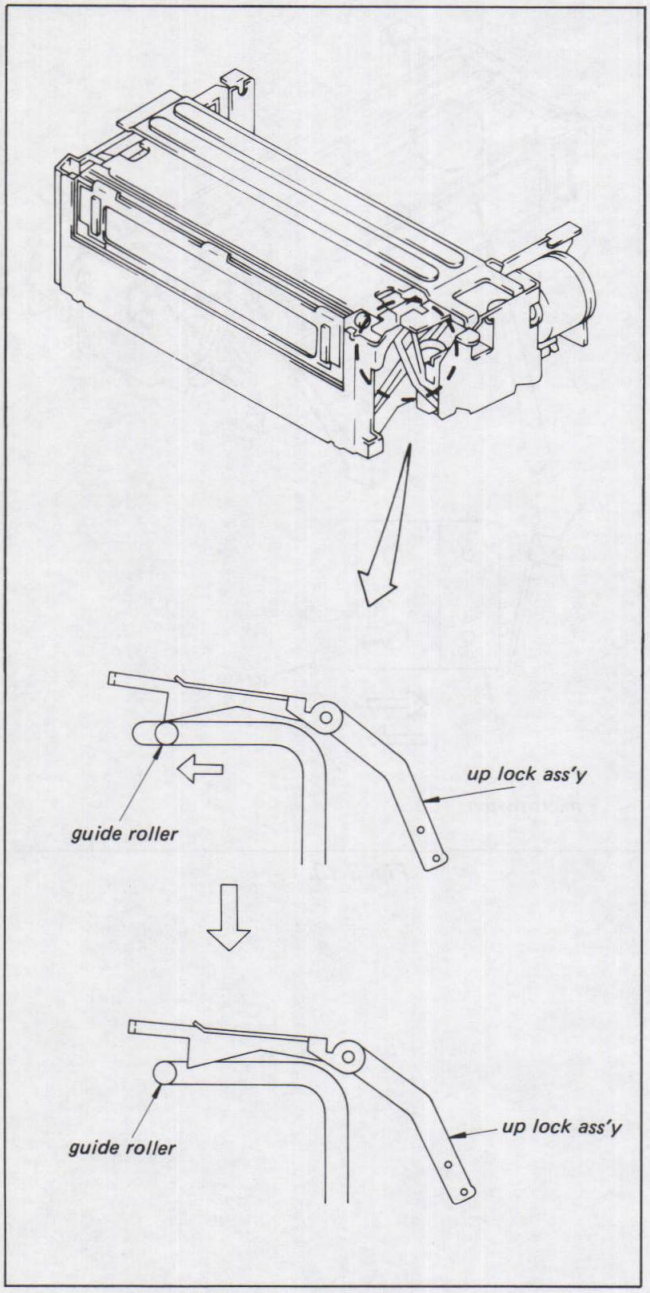

Fig. 3-14. Up lock ass'y movement

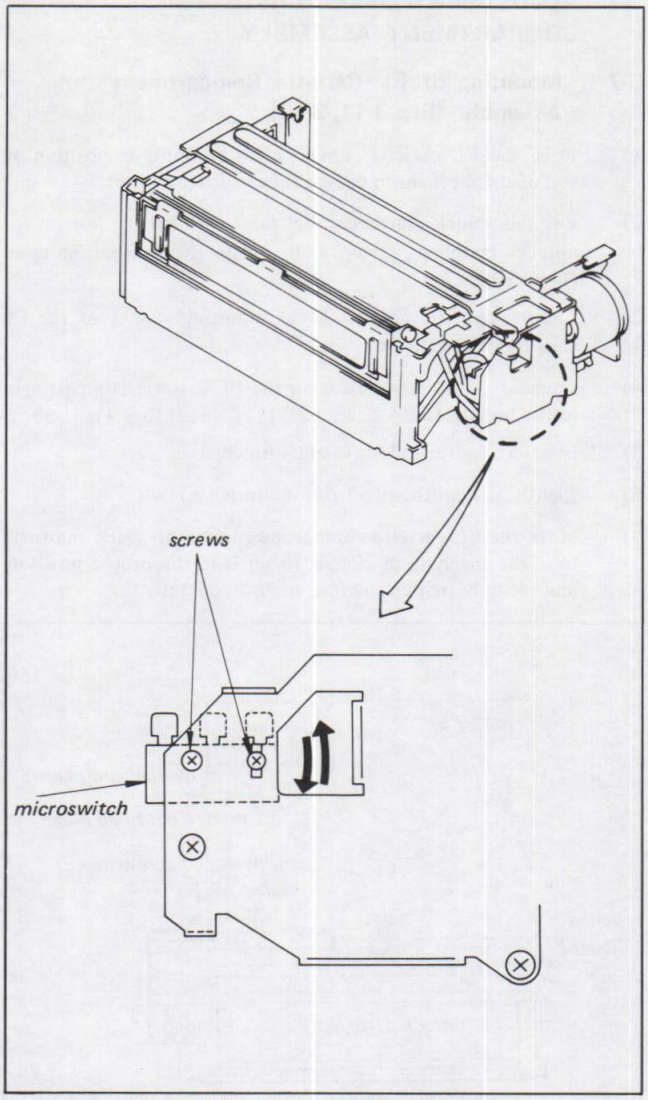

Fig. 3-15. Microswitch adjustment

www.freeservicemanuals.info

3-7-4. Check and Adjustment of Cassette Down Switch Operation

[Check Procedure]

1) In cassette down state, confirm that the gap between the front edge of the lock plate assembly and the groove is less than 0.5 mm.

2) Next, move the lock plate assembly slowly in opposition to the spring, and confirm that when the microswitch switches, the gap between the front edge of the lock plate and the groove is 0.7 ~ 1.0 mm.

[Adjustment Procedure]

Loosen the screw on the CD adjust plate, and move the plate in the direction of the arrow to adjust.

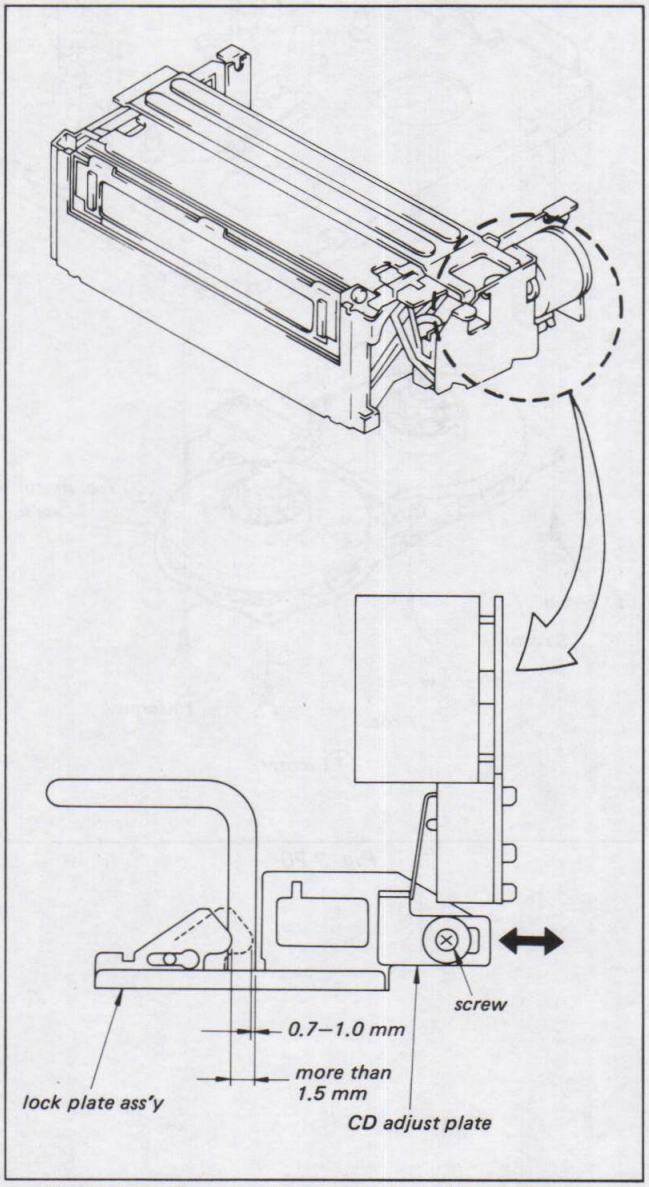

Fig. 3-16. Cassette down switch position adjustment

3-7-5. Check and Adjustment of Cassette Door Assembly and Rail Clearance

[Check Procedure]

Confirm that the clearance between cassette door assembly roller and rail is 0.4 ± 0.1 mm when the play between the assembly and rails is all on one side.

[Adjustment Procedure]

Loosen the two screws on the right-hand rail and adjust for the proper clearance. A wire of 0.4 mm diameter (e.g. 1/8W resistor lead) inserted between the roller and rail will help simplify the procedure.

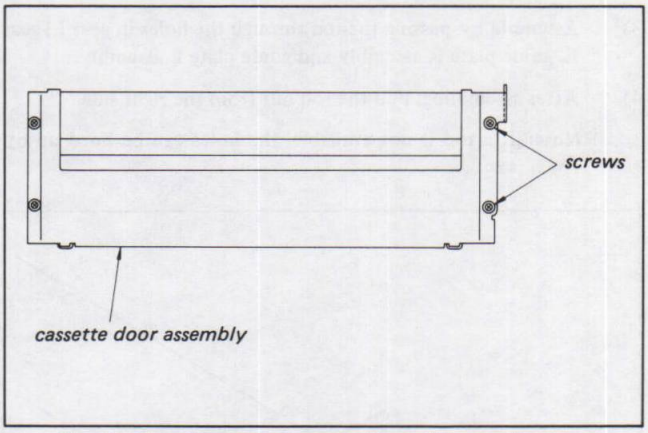

Fig. 3-17. Cassette door ass'y position adjustment

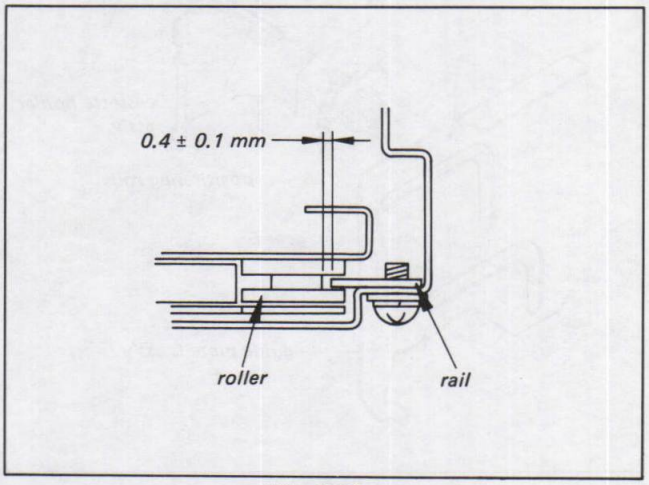

Fig. 3-18.

www.freeservicemanuals.info

3-7-6. Positioning of Left/Right Gears when Assembling

[FL Cassette Compartment]

The gear system on the FL cassette compartment assembly is arranged so that the cassette holder moves parallel to the mechanism chassis at all times. Therefore, if these gears are disengaged, they must be properly engaged when re-assembling, or the cassette holder will be on a slant.

[Gear Positioning]

1) Prepare a rod about 1.5 mm thick and 200 mm long.

2) Pass the rod through the hole in the cassette holder assembly. (Perform on left and right sides.)

3) Assemble by passing the rod through the holes in gear E, gear E, guide plate R assembly and guide plate L assembly.

4) After assembling, pull the rod out from the right side.

Note: If a rod is not available, the holes can be lined up by eye.

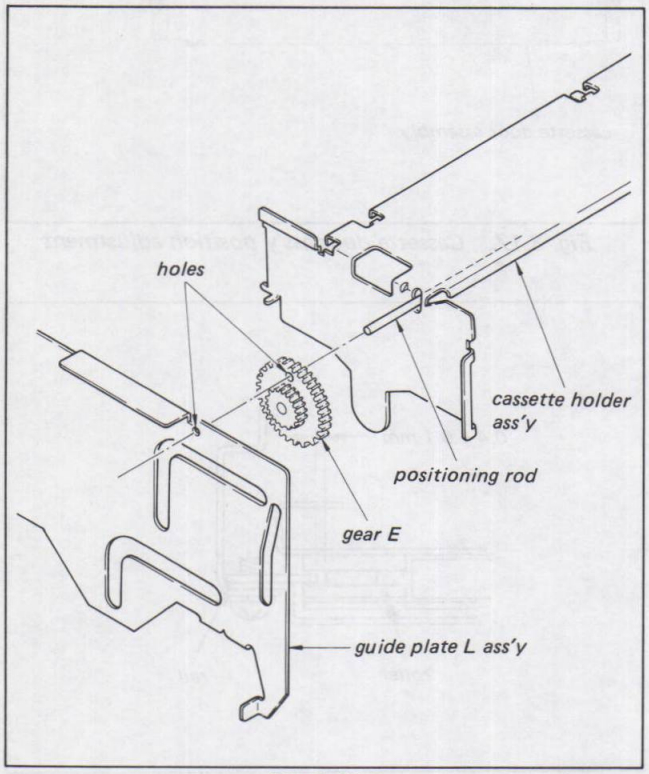

Fig. 3-19.

3-8. REMOVAL OF REEL MOTOR

Unscrew the five mounting screws (1) on the rear of the chassis and remove the reel motor body.

Note: The rotor section can be removed by pulling it straight up.

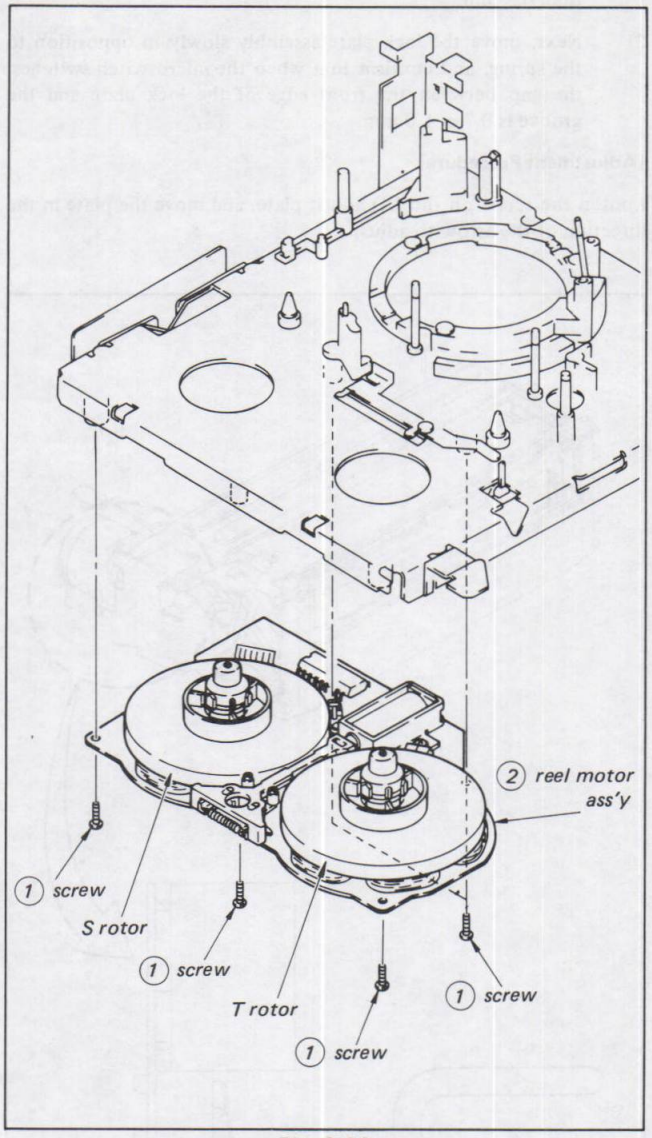

Fig. 3-20.

www.freeservicemanuals.info

3-9. UNTHREADING CHECK

1) Set in STOP mode without loading a cassette.

2) Press the EJECT button and unthread. (Unthreading is complete when the T slider shaft returns slightly in the threading direction and stops after pushing the cassette compartment lock release lever.)

3) Check that the actuator for the unthreading end switch is not tripped as shown in Fig. 3-21. (Slowly rotate the threading motor by hand and verify by the click sound.) Adjust according to Paragraph 3-14-2 if necessary.

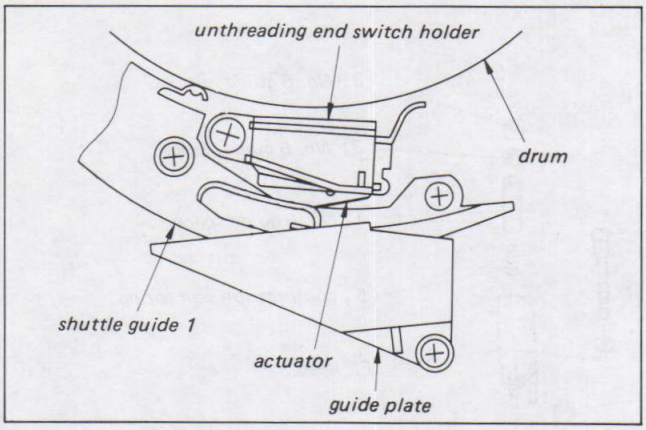

Fig. 3-21. Unthreading end switch

www.freeservicemanuals.info

3-10. S THREADING RING REPLACEMENT AND ADJUSTMENT

3-10-1. Preparation for Removal of S Threading Ring

Remove ACE assembly, FE Head and Threading Motor. (Fig. 3-22)

1) Unscrew the Phillips head continuous-thread stepped screw (1).

2) Remove the No. 6 guide nut (2), flange (3), spacer (4) and compression coil spring (5).

3) Remove the two guide adjusting nuts (6) and the ACE assembly and FE head.

Caution: ACE assembly and FE head are connected by a lead. Be careful when removing them. The compression coil spring underneath the ACE assembly does not have to be removed. However, be careful not to lose it.

4) Unscrew the two screws (7) and pull the threading motor assembly up to remove.

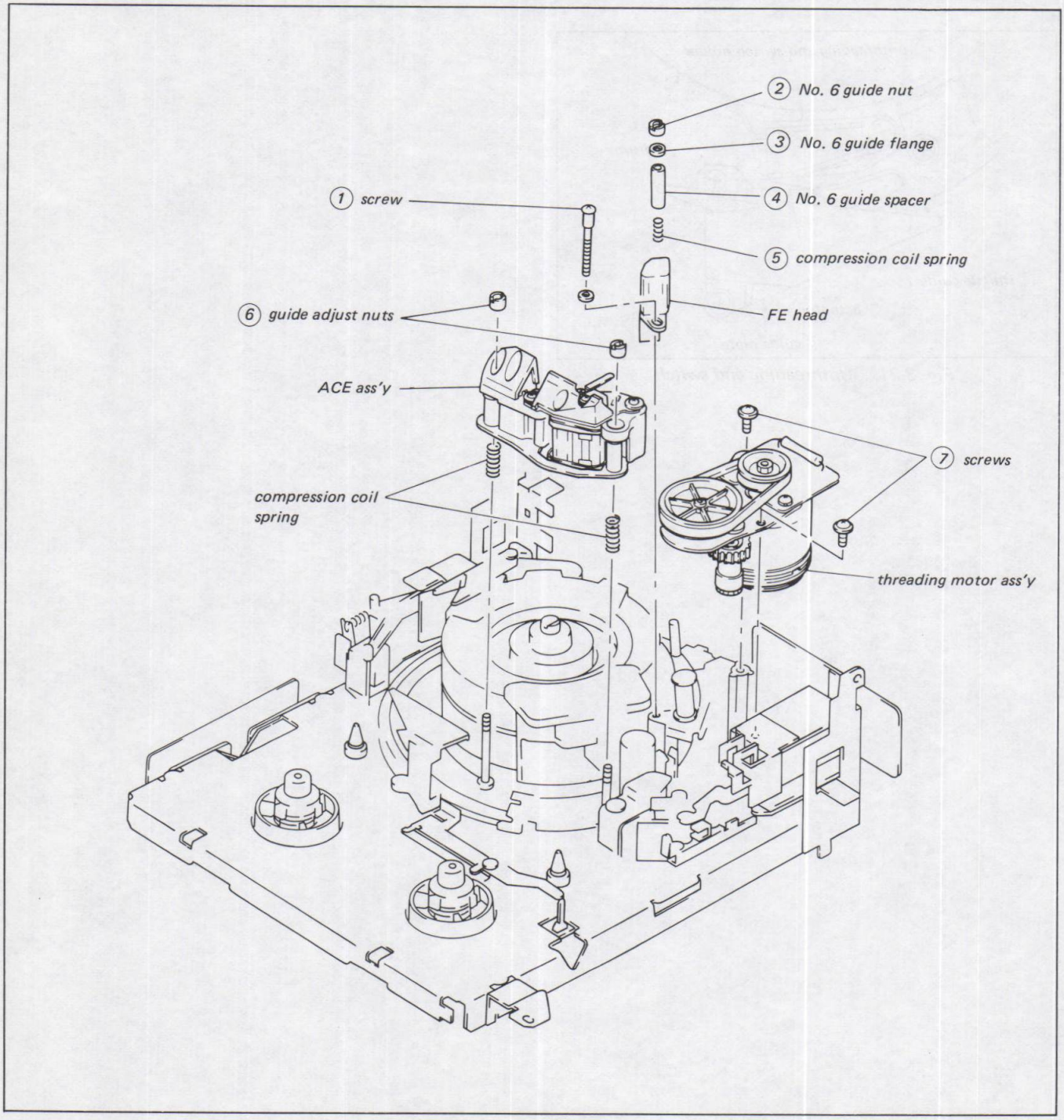

Fig. 3-22.

www.freeservicemanuals.info

[Removal of Other Parts] (Fig. 3-23)

1) Measure the gap between the upper drum and adjust the plate as in the replacement of the drum assembly. (Fig. 3-5)

2) Unscrew the screws (1) and remove the tape guide ground plate (2) and adjust plate (3).

3) Unscrew the two screws (4) and remove the holder assembly (5).

4) Unscrew screw (6) and remove the guide plate (7).

5) Unscrew the two screws (8) and five screws (9) to remove the shuttle guide 1 (10) and 2 (11), as well as the slant base assembly (12).

6) Unscrew screw (13) and remove the pin recliner (14).

Caution: When the guide plate is removed, do not thread or unthread with the shuttle guide mounted.

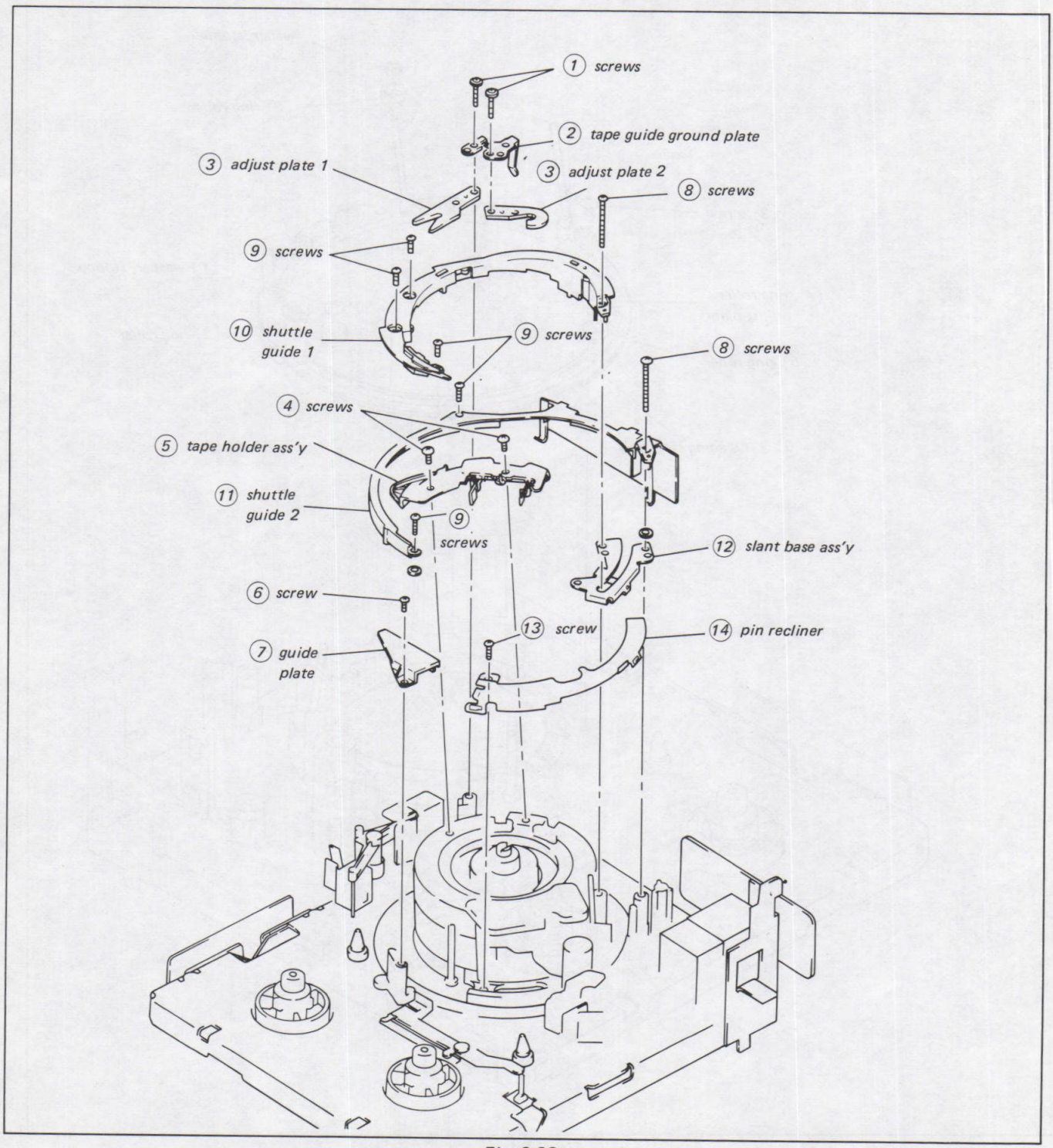

Fig. 3-23.

www.freeservicemanuals.info

3-10-2. Removal of S Threading Ring (Fig. 3-24)

1) Remove the spring of the lock arm assembly. (Refer to Paragraph 3-14-1, Fig. 3-31)

2) Remove stop washer (1) and ring roller (2).

3) Remove the UTE switch subassembly. (Refer to Paragraph 3-14-2, Fig. 3-32)

4) Unscrew screw (3) and remove the ring roller adjust plate (4) and ring roller (5).

5) Remove the S threading ring (6).

Caution: Do not use the same washer twice.

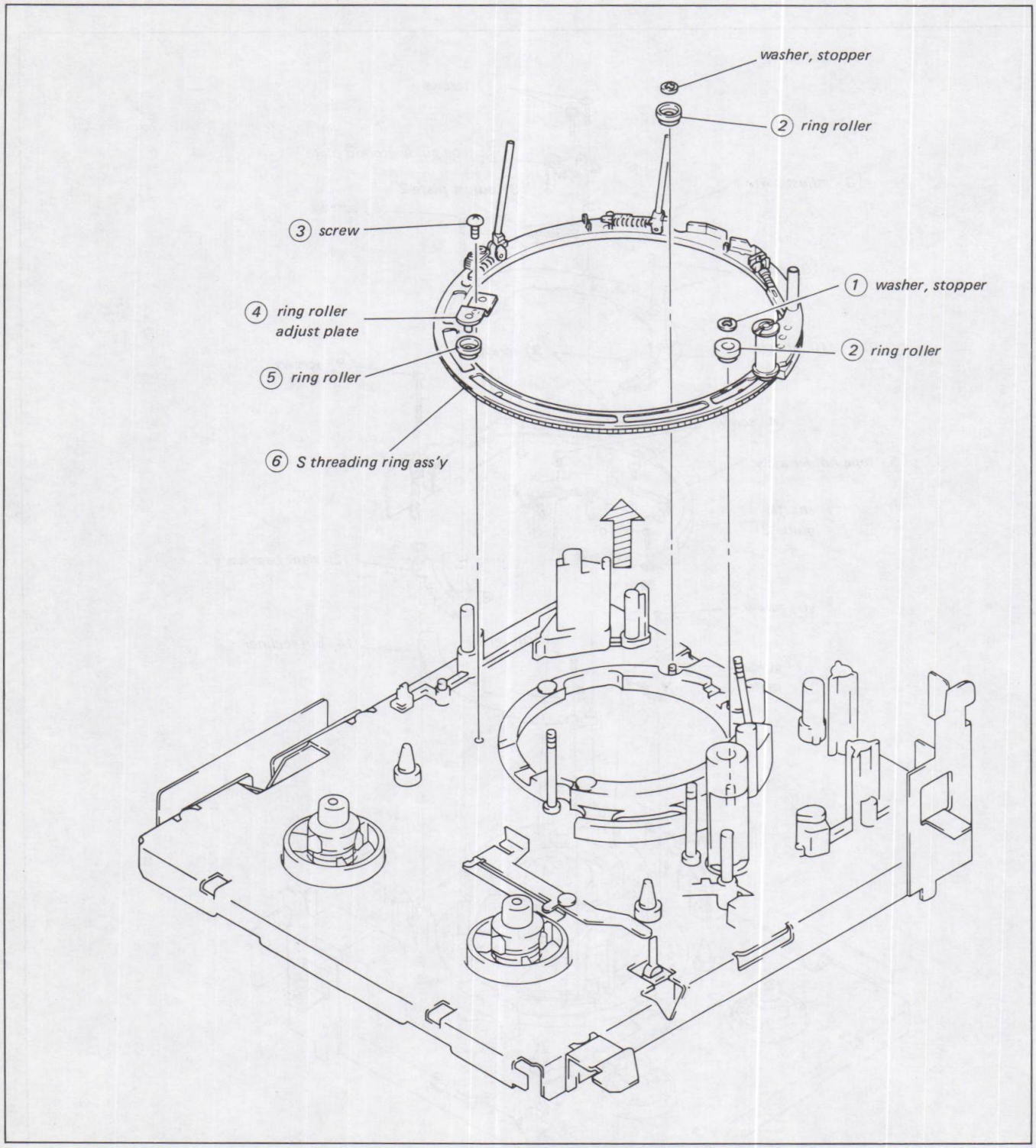

Fig. 3-24.

www.freeservicemanuals.info

3-10-3. Checking Slider Stopper Mounting (Fig. 3-25)

1) Check that the drive gear is engaged.

2) Loosen screw (1), insert a spacer (t = 0.2) between the slider gear and slider stopper, then tighten screw (1) while pushing in the directions of arrows (A) and (B).

Caution: Make sure to push it in the direction (A) to eliminate any play. The slider stopper rotates in the direction of arrow (A) when screw (1) is tightened. Therefore, tighten the screw while holding it with a blade-tip screwdriver.

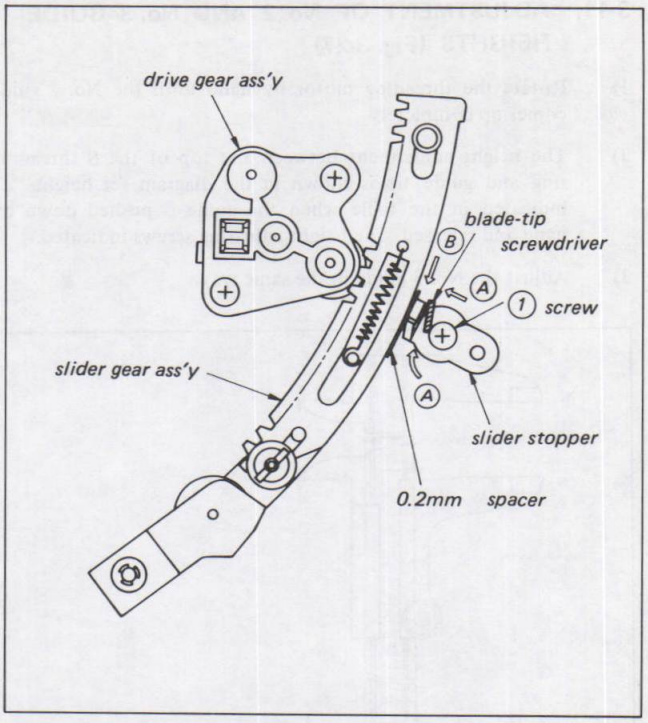

Fig. 3-25. Slider stopper mounting check

3-10-4. Replacement of S Threading Ring (Fig. 3-26)

1) Mount the S threading ring.

2) Insert a spacer (t = 0.2) and set the slider gear to the position where unthreading is complete.
(In the diagram, the slider stopper and slider gear come into contact at (A) through the spacer.)

3) Match up the notch on the S threading ring and the tab on the drive gear as shown at (B) in the diagram.

4) Engage the drive gear, S threading ring, and slider gear, and position the chassis.

5) The gap between the tab on the slider gear and the slider stopper at section (A) is about 0.5 mm when the S threading ring is rotated fully CCW toward of arrow (a). At the same time, verify that the chassis hole (ϕ3) at (C) and the hole (ϕ1.5) of the S threading ring match.

6) If the holes do not match exactly, adjust the engagement of the drive gear and S threading gear.

Note: After replacing and mounting, adjust the guide height according to Section 3-11. Also adjust the ACE assembly according to the section on "Tape Path Adjustment".

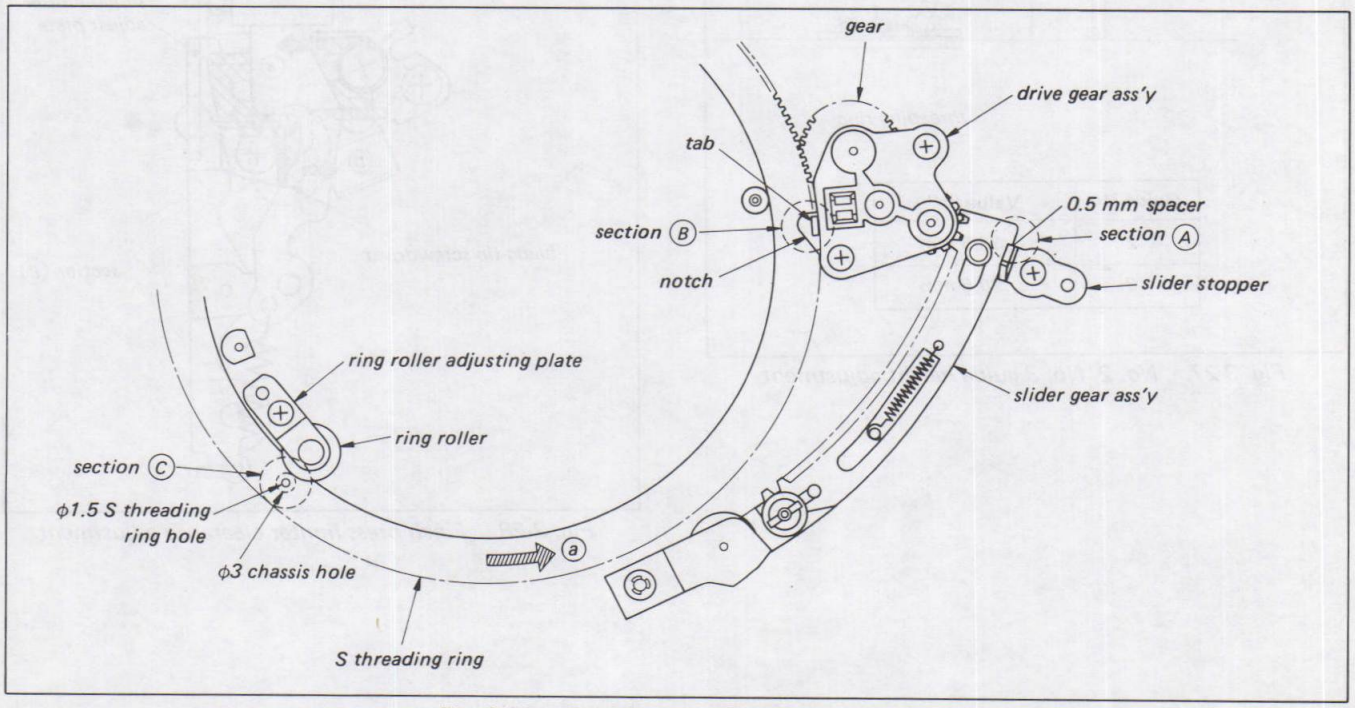

Fig. 3-26. Replacement of S threading ring

www.freeservicemanuals.info

3-11. ADJUSTMENT OF No. 2 AND No. 3 GUIDE HEIGHTS (Fig. 3-27)

1) Rotate the threading motor by hand until the No. 2 guide comes up completely.

2) The height adjustment between the top of the S threading ring and guide tip is shown in the diagram set height "a" indicated in the table when the guide is pushed down by hand and released. The height adjusting screws indicated.

3) Adjust the No. 3 guide in the same way.

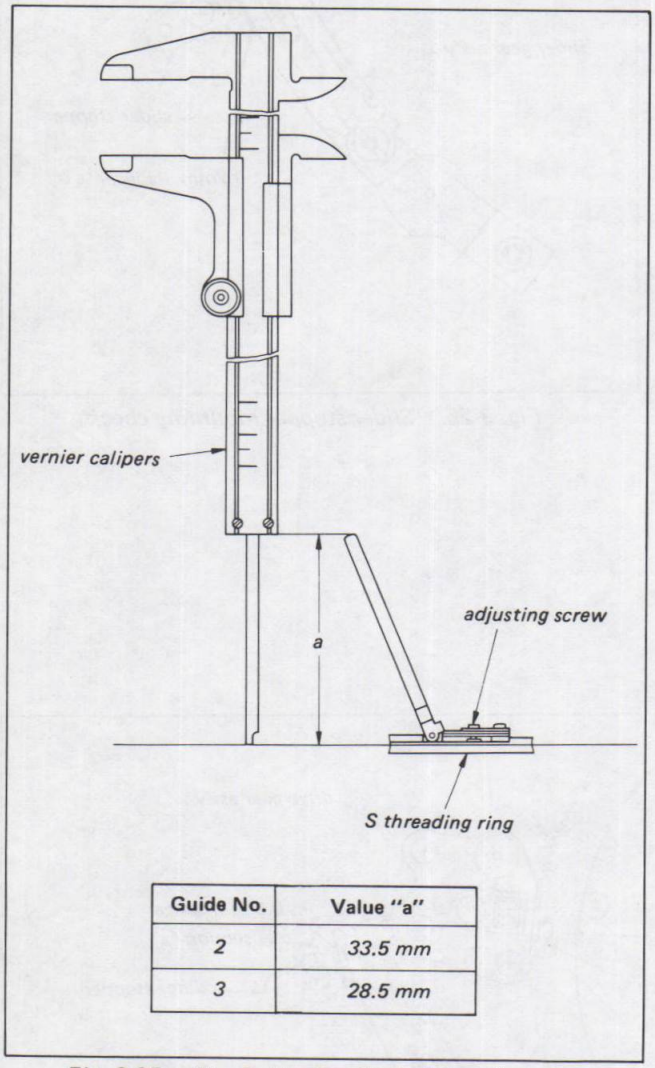

Guide No.	Value "a"
2	33.5 mm
3	28.5 mm

Fig. 3-27. No. 2, No. 3 guide height adjustment

3-12. CHECK AND ADJUSTMENT OF PINCH PRESS LIMITER CLEARANCE

[Check Procedure]

1) Set in the STOP mode without inserting a cassette.

2) Check that the clearance "t" of the pinch press limiter (Fig. 3-28) is 0.2 – 0.7 mm. If not, adjust as follows:

[Adjustment Procedure]

1) Loosen screw (A) in Fig. 3-28 with the pinch solenoid held in.

2) Move the pinch limiter adjust plate (shaded in the diagram) fully in the direction of arrow (a), so the clearance "t" at this time is 0.

3) Push the pinch limiter adjust plate in the direction of arrow (b) as shown at section (B) using a blade-tip screwdriver, until the clearance "t" is 0.2 – 0.7 mm.

4) Tighten screw (A) and lock it.

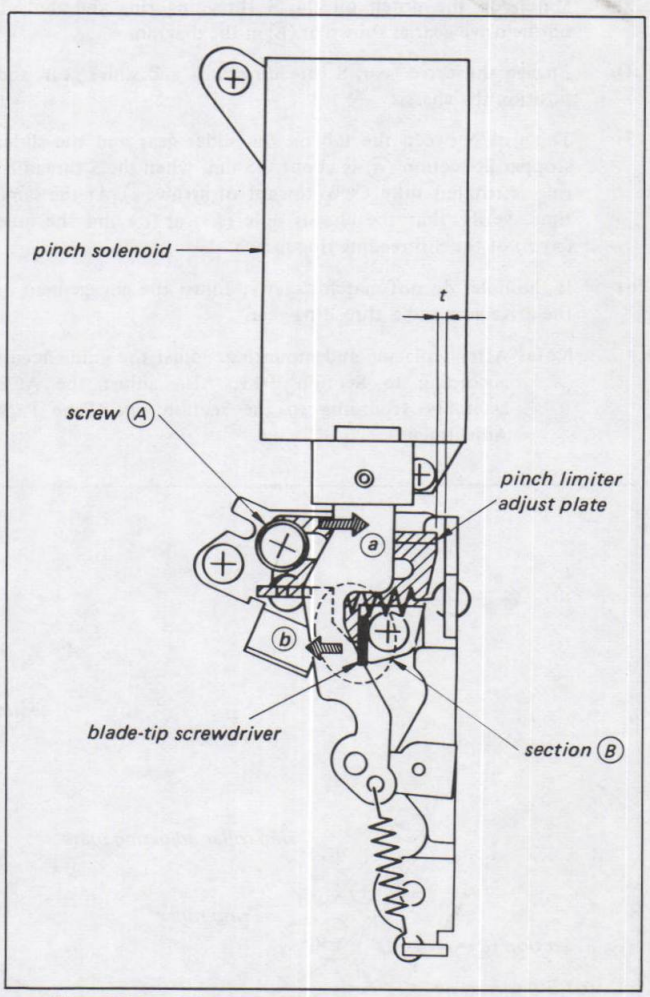

Fig. 3-28. Pinch press limiter clearance adjustment

www.freeservicemanuals.info

3-13. BRAKE OPERATION CHECK AND BRAKE SOLENOID ADJUSTMENT

Tape slack occurs particularly when the tape diameter on the take-up side on both FF and REW is small, so recheck in these states.

[Check Procedure]

1) Rewind the tape and start forward feed.

2) Repeat FF → STOP several times and check that the tape does not slacken. If it does, adjust according to Adjustment Procedure, below.

3) Wind the tape to the end in fast forward.

4) Repeat REW → STOP several times and verify that the tape does not slacken. Adjust as follows if it does.

[Adjustment Procedure]

1) Loosen screw (A) on the plunger solenoid. (Fig. 3-29)

2) Push the plunger in the direction of arrow (B) by hand until fully retracted.

3) Adjust the plunger solenoid so as to obtain clearances of 0.2 – 0.7 mm between the two brakes and the S and T reel rotors. Tighten screw (A).

Note: After tightening screw (A), check for proper clearance at (C) and (D).

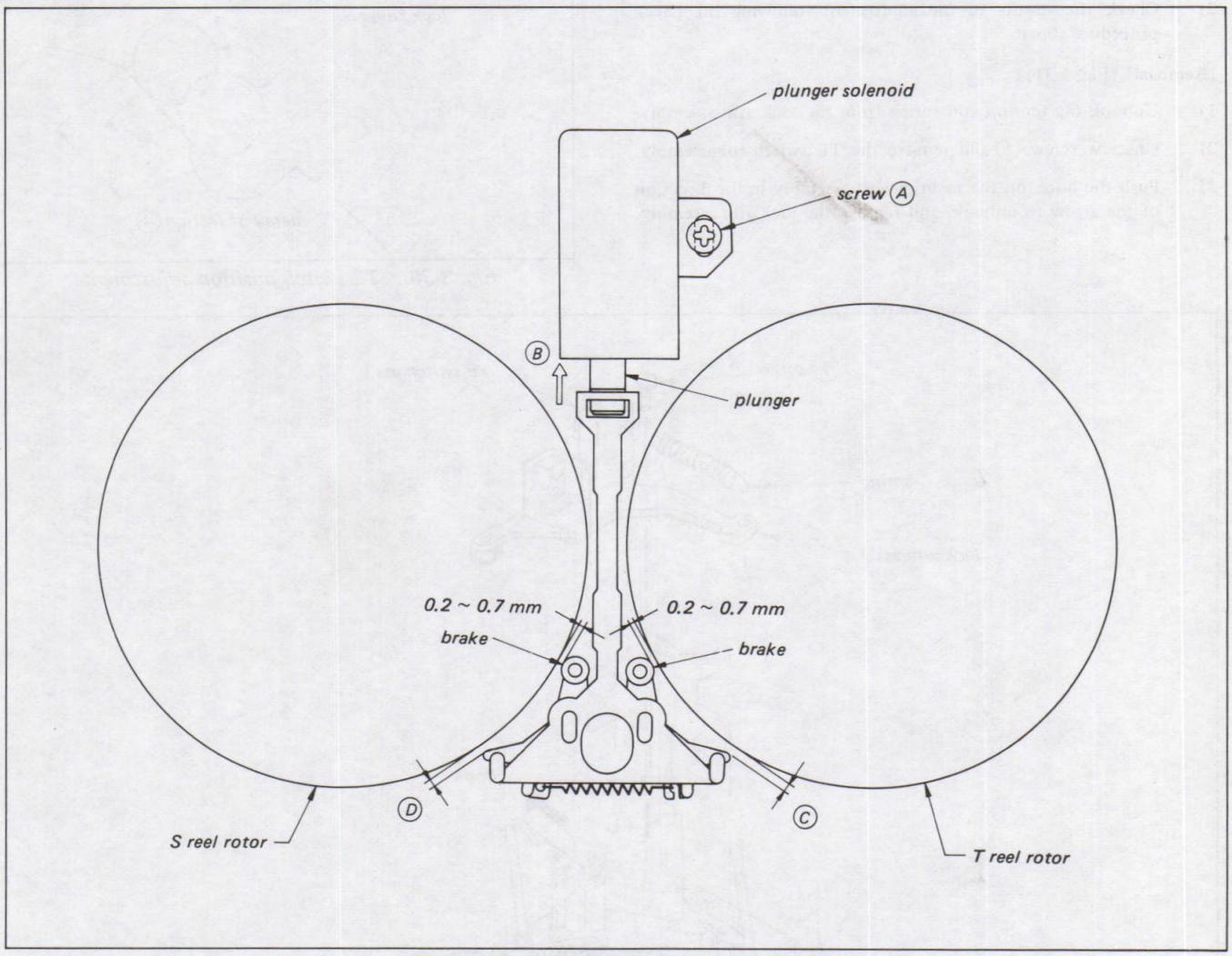

Fig. 3-29. Brake solenoid adjustment

www.freeservicemanuals.info

3-14. CHECK AND ADJUSTMENT OF MICROSWITCH POSITION

3-14-1. Check and Adjustment of Threading End Switch (TE Switch) Position

[Check Procedure] (Fig. 3-30)

Rotate the S threading ring by hand and check that the TE switch turns on and off with a clicking noise while the lock roller is moving within the lower 2/3 of the straight portion ℓ of the recess (Ⓐ in Fig. 3-30) on the ring. If not, adjust as follows.

[Adjustment Procedure]

1) Bring the lock roller into the lower 2/3 of the "ℓ" range in the recess on the S threading ring. Move the TE switch in the direction of the arrow using a blade-tip screwdriver, until the switch trips (click noise), then tighten screw Ⓑ.

2) Check the results of the adjustment following the check procedure above.

[Removal] (Fig. 3-31)

1) Unhook the tension coil spring from the lock arm assembly.

2) Unscrew screw ① and remove the TE switch subassembly.

3) Push the hook on the main chassis assembly in the direction of the arrow to unhook, and remove the lock arm assembly.

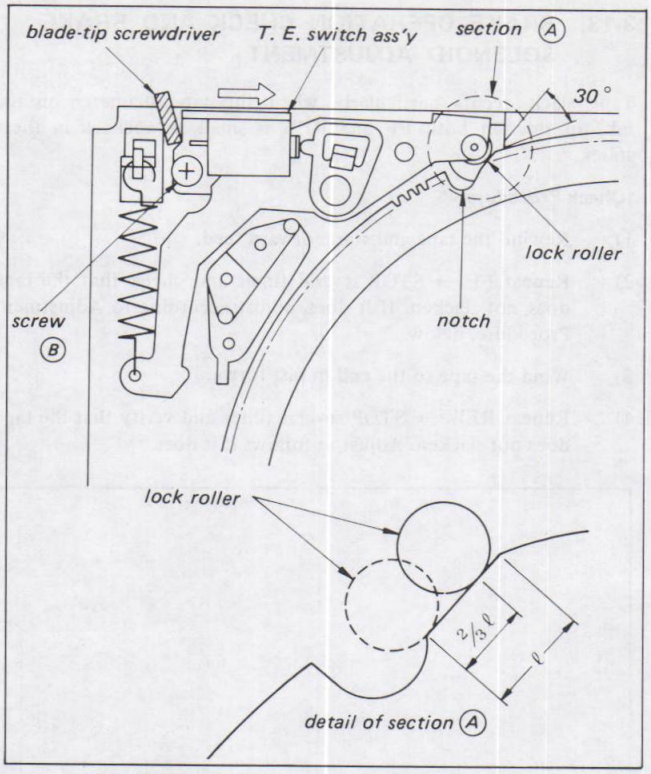

Fig. 3-30. TE switch position adjustment

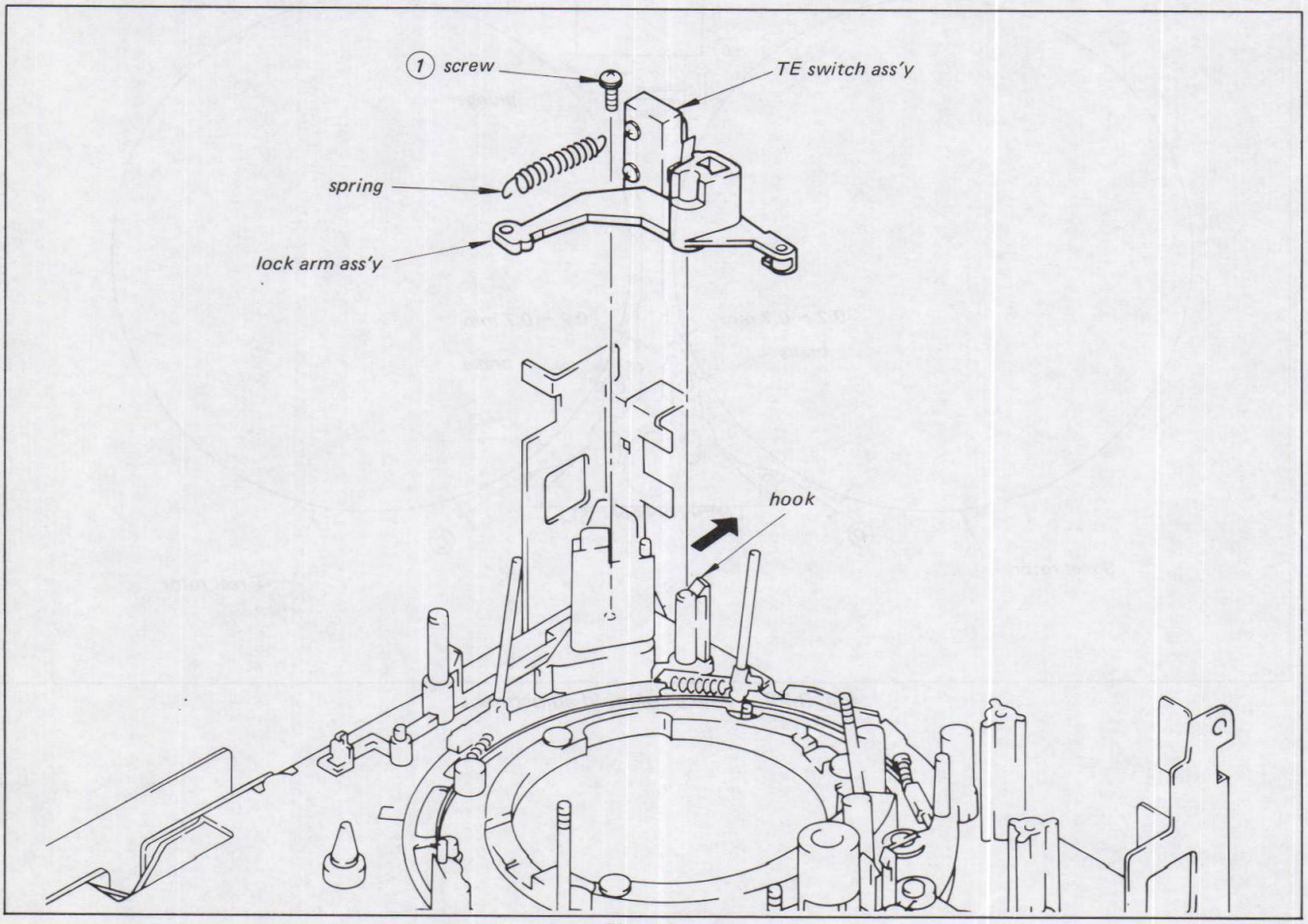

Fig. 3-31.

www.freeservicemanuals.info

3-14-2. Check and Adjustment of Unthreading End Switch (UTE Switch) Position

[Check Procedure]

Rotate the S threading ring by hand. Verify that the switch trips when a pin of ϕ1.5 is inserted at section (A) in Fig. 3-32 after the UTE switch arm roller assembly has dropped into the UTE switch cam groove. Verify that the switch does not trip when a pin of ϕ0.6 is inserted.

[Adjustment Procedure]

1) If the switch does not trip when the ϕ1.5 pin is inserted, loosen small screw (B) and adjust by moving the roller in the direction of the arrow little by little.

2) Bend the switch actuator as shown in Fig. 3-33 if the switch turns on when a ϕ0.6 pin is inserted.

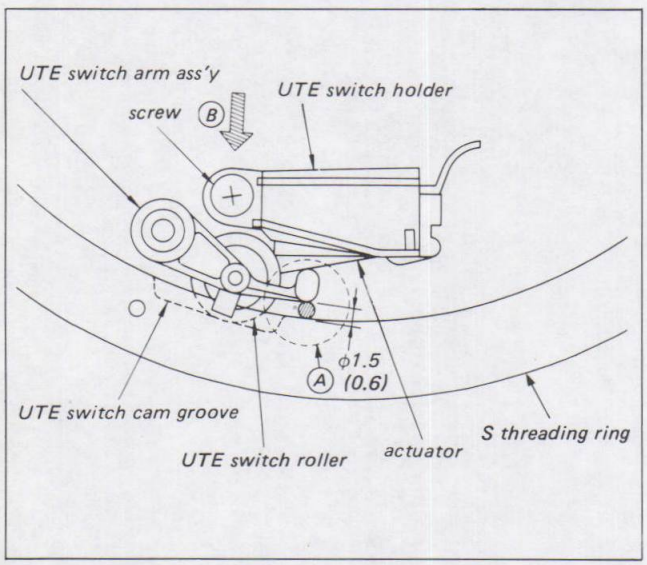

Fig. 3-32. UTE switch position adjustment

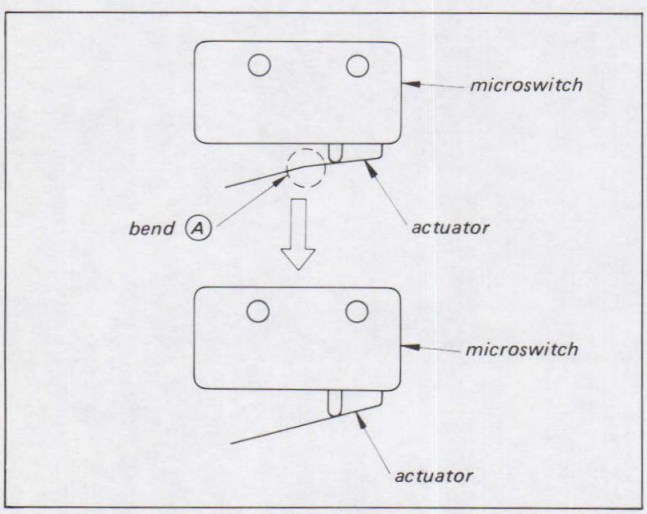

Fig. 3-33.

Caution: Insert the ϕ1.5 and 0.6 pins in the proper positions shown in Fig. 3-32. (If the pins are inserted too close to the UTE roller side as shown in Fig. 3-34, the clearance inside will be less than 1.5 mm, even though it is 1.5 mm at the entrance, because of the switch construction.)

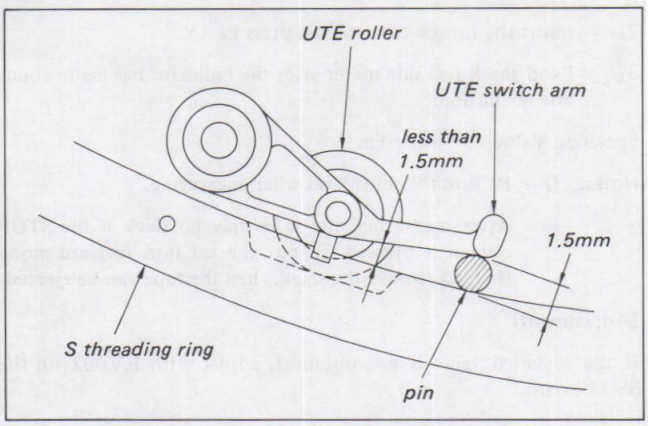

Fig. 3-34.

[Removal]

1) Unscrew screw (1) as shown in Fig. 3-35.

2) Release the switch hook from the chassis and remove the switch body while pushing the actuator to the "ON" position.

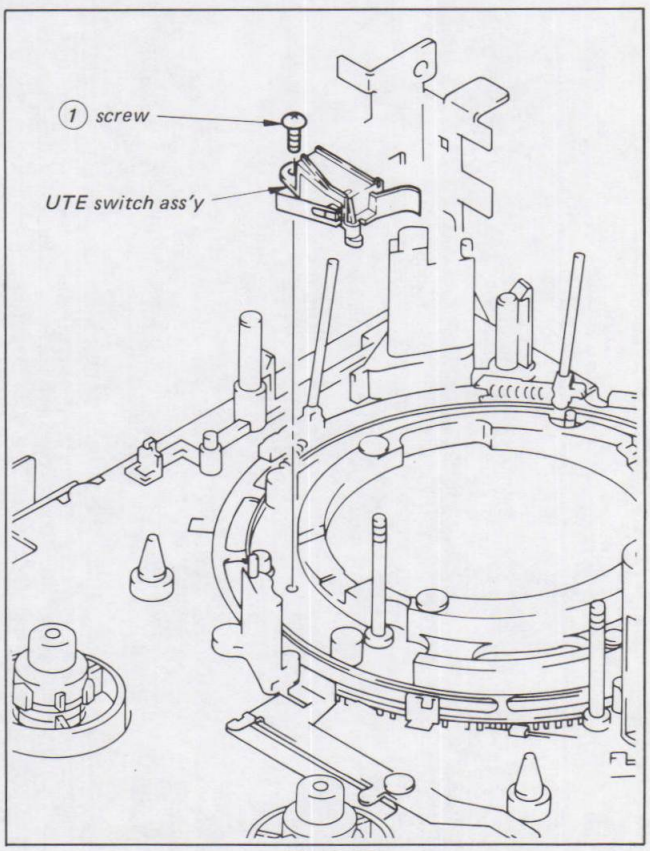

Fig. 3-35.

www.freeservicemanuals.info

3-15. FORWARD/BACK TENSION MEASUREMENT

Perform this measurement using torque cassette SL-0003C according to the procedure below.

[Procedure]

1) Remove the upper panel so that the tape path is visible.

2) Insert the torque cassette and press PLAY.

3) Read the S reel side meter after the indicator has made about one revolution.

Specified Value 45 ~ 48 g·cm

Notes: i) Be sure the set is level when measuring.

ii) After measuring, the tape may go slack if the STOP button is pressed, so put the set into forward mode first, to remove the slack, then the tape can be ejected.

[Adjustment]

If the specified value is not obtained, adjust with RV002 on the SS-11 board.

www.freeservicemanuals.info

SECTION 4
TAPE PATH ADJUSTMENT

4-1. TRACKING ADJUSTMENT

This adjustment has significant effect on picture quality in each mode and tape interchangeability, so please perform it very carefully.

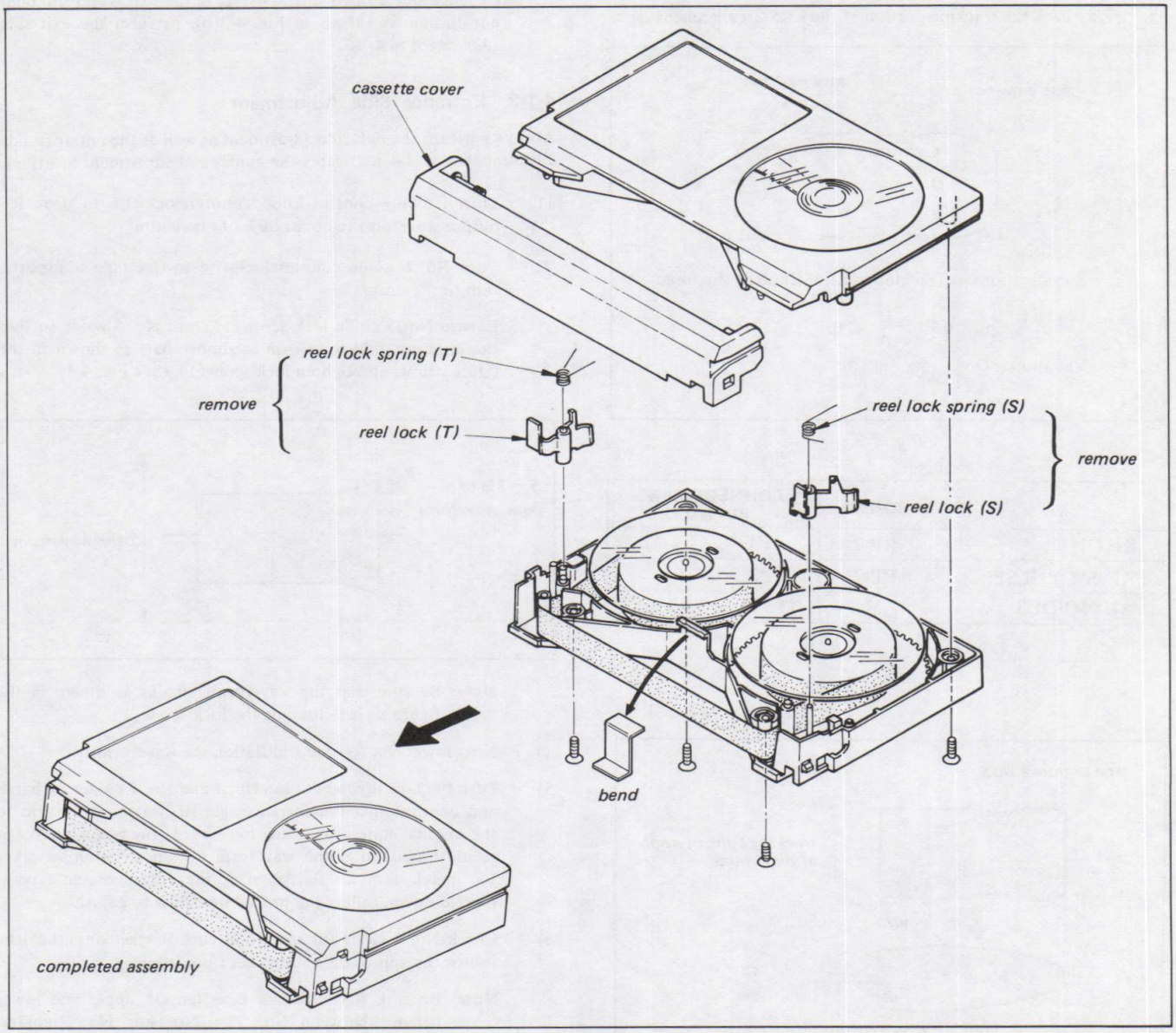

Fig. 4-1.

www.freeservicemanuals.info

4-1-1. Preparation

1) Remove reel lock springs, reel locks and the cassette cover of alignment tape KR5-2H as shown in Fig. 4-1.

2) Clean the tape contact surfaces (tape guides, drum, capstan shaft, pinch roller, ACE FE head surfaces) with chamois dampened with methanol.

3) Oscilloscope connections: RF OUT . . . . . TP1 (RP-7 board)

4) Play back the tracking portion of the KR5-2H alignment tape.

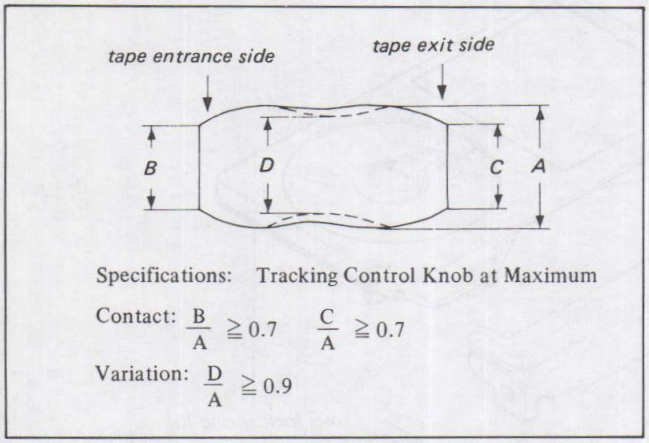

Fig. 4-2.

	BOARD	CONNECTOR & PIN NO.
RF OUT	RP-7	TP1
RF SW PULSE	RP-7	TP3
AUDIO OUT	AM-1	TP511 or TP512

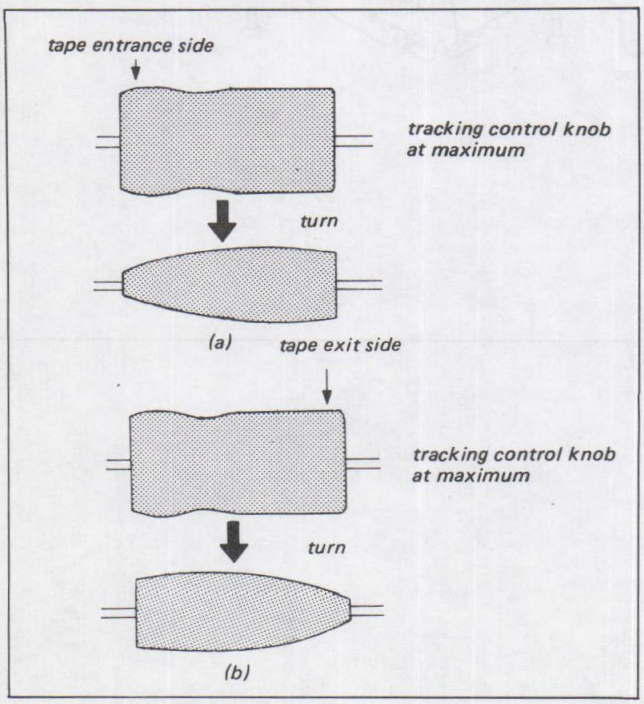

Fig. 4-3.

5) Confirm that the RF output waveform is flat, with maximum amplitude. (The waveform should increase and decrease, remaining flat, when the tracking control knob is turned back and forth.) Also, when the waveform is maximum, confirm that the RF output waveform variation and contact satisfy the specifications shown in Fig. 4-2. If they do not, follow the instructions in 6).

6) If the tracking control knob is turned and the entrance waveform does not flatten as shown in Fig. 4-3(a), perform the entrance side adjustment in 4-1-2. If the exit waveform does not flatten as shown in Fig. 4-3(b), perform the exit side adjustment in 4-1-3.

4-1-2. Entrance Side Adjustment

Always perform the exit side adjustment as well as the entrance side adjustment. Fig. 4-4 illustrates the guides and adjustment locations.

1) Turn tracking control knob counterclockwise to drop RF output waveform to about 60% of maximum.

2) Turn No. 6 guide counterclockwise to free tape transportation to the drum.

3) Loosen No. 5 guide lock screw (1), turn No. 5 guide so that the entrance side waveform is almost flat, as shown in the figure below, and tighten lock screw (1). (See Fig. 4-5)

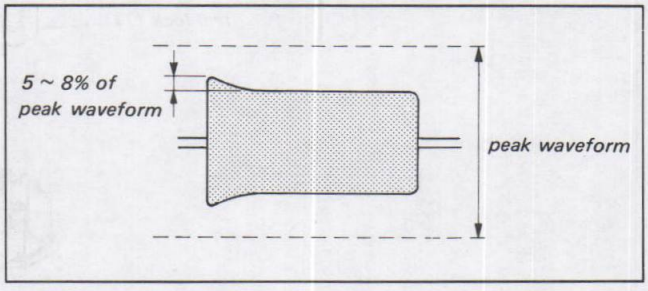

Note: Be sure that the waveform remains as shown in the figure after tightening the lock screw (1).

4) Next lower No. 6 guide and flatten the waveform.

5) Push the tape down between No. 4 and No. 5 guides by hand, and confirm that the entrance side RF waveform returns to the original state after being lowered. If the waveform is not as illustrated, or if the waveform does not flatten, or takes too much time to flatten after the entrance side tape is pushed down, follow the procedure below to adjust.

6) Check No. 5 guide for space and curl. If space or curl exists, follow the appropriate adjustment procedure.

Note: Be sure that there is tape tension upper and lower balance between No. 3 – No. 4 – No. 5 guides. Perform No. 3 or No. 5 guide lateral adjustment if necessary.

www.freeservicemanuals.info

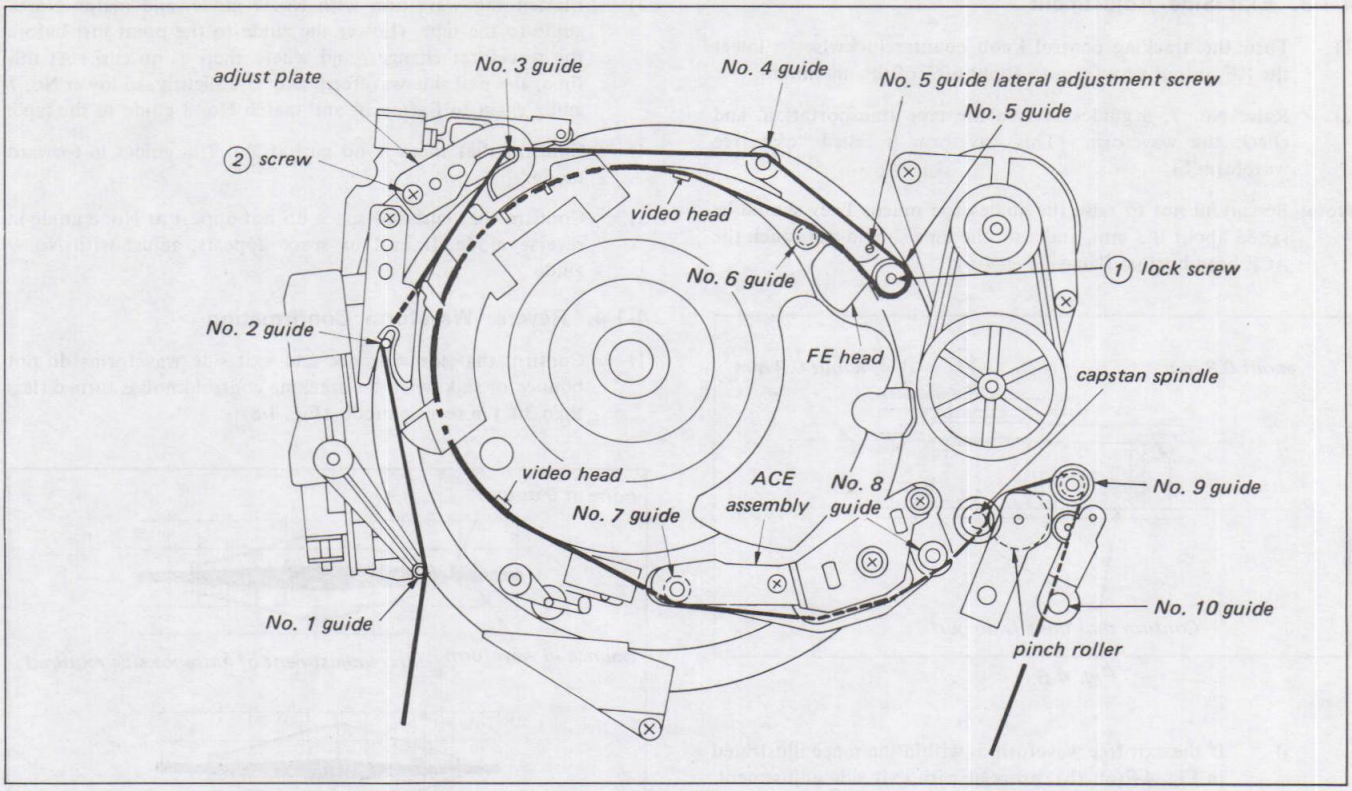

Fig. 4-4.

[If the waveform entrance output does not increase]

1) Check to make sure tape upper and lower tension is equal between No. 3 – No. 4 – No. 5 guides. If it is not, perform No. 3 or No. 5 quide lateral adjustment.

   Note: Be sure there is no space at No. 4 guide lower flange.

2) Raise No. 4 guide lower flange to raise entrance output.

   Note: No. 4 guide lower flange may be raised 0.4 mm from its lowest position.

3) If the waveform does not increase in step 2), turn No. 5 lateral adjustment screw slightly (less than 360°) counter-clockwise.

[If the waveform entrance output does not decrease]

1) Move the No. 3 guide adjust plate away from the drum, and tighten screw (2) at the point just before the lower tension of the tape loosens.

2) If the tape is touching No. 4 guide lower flange, lower the flange. If it is floating, adjust No. 5 guide laterally.

[If there is space at no. 5 guide]

Turn No. 4 guide counterclockwise to raise the tape and remove the space at No. 5 guide.

Note: Be careful not to create a large space at the bottom of No. 4 guide.

[If there is curl]

1) When there is a space at the bottom of No. 4 guide:
   Lean the adjust plate of No. 3 guide toward the outside until the point just before the lower tape tension loosens.

2) When there is curl but no space at the bottom of No. 4 guide:

   i) Confirm that No. 4 guide is not raised too high. Turn clockwise to lower if necessary.

   ii) If this does not solve the problem, tighten No. 5 guide lateral adjustment screw by turning clockwise until the curl disappears.

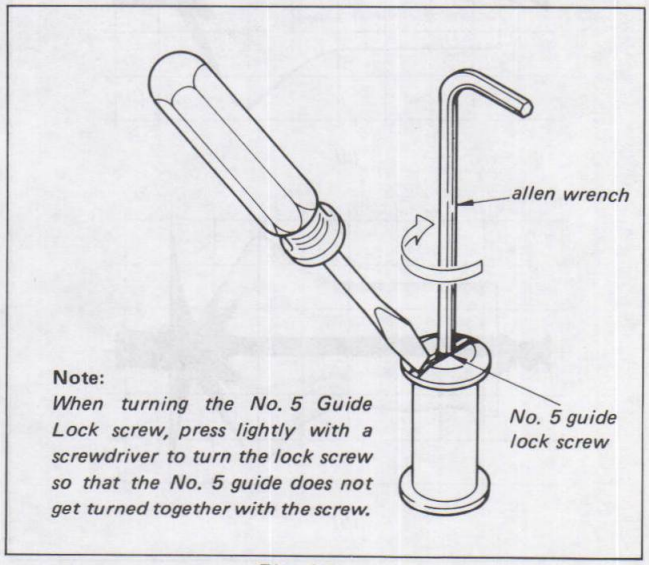

Note:
When turning the No. 5 Guide Lock screw, press lightly with a screwdriver to turn the lock screw so that the No. 5 guide does not get turned together with the screw.

Fig. 4-5.

www.freeservicemanuals.info

4-1-3. Exit Side Adjustment

1) Turn the tracking control knob counterclockwise to lower the RF output waveform to about 60% of the maximum.

2) Raise No. 7, 8 guides to free the tape transportation, and check the waveform. (This waveform is called "exit free waveform".)

Note: Be careful not to raise the guides too much. They should be raised about 0.3 mm, and also, the tape should not touch the ACE head bottom flange. (Fig. 4-6)

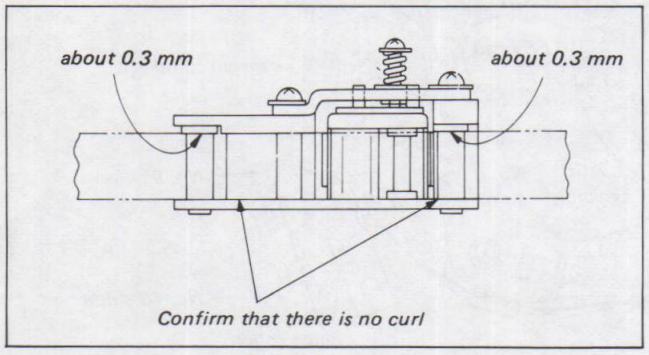

Fig. 4-6.

i) If the exit free waveform is within the range illustrated in Fig. 4-7(a), (b), proceed with exit side adjustment.

ii) If it is not within the specified range, follow the adjustment procedure in 4-3.

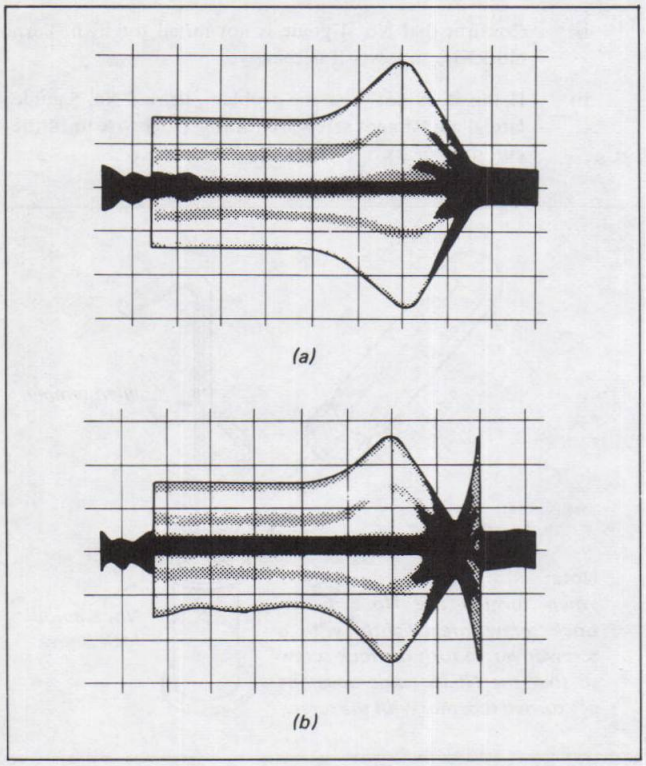

Fig. 4-7.

3) Flatten the waveform with No. 7 guide, and match No. 8 guide to the tape. (Lower the guide to the point just before the waveform changes, and where there is no curl.) At this time, the exit side waveform may rise slightly, so lower No. 7 guide again to flatten it, and match No. 8 guide to the tape.

4) Confirm that there is no curl at No. 7, 8 guides in forward mode.

5) Confirm that curl and space do not appear at No. 8 guide in reverse mode. If curl or space appears, adjust with No. 9 guide.

4-1-4. Reverse Waveform Confirmation

1) Confirm that the entrance and exit side waveforms do not bounce or sink when the tracking control knob is turned (less than 30°) in reverse mode. (Fig. 4-8)

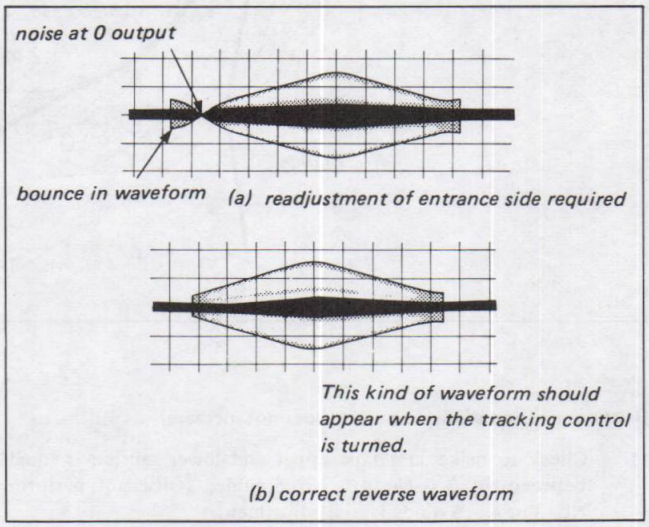
noise at 0 output
bounce in waveform
(a) readjustment of entrance side required
This kind of waveform should appear when the tracking control is turned.
(b) correct reverse waveform

Fig. 4-8.

2) If there is bounce or sinking in the entrance side waveform, re-adjust the entrance side in forward mode, and if there is bounce or sinking in the exit side waveform, re-adjust the exit side.

3) Confirm the waveform in reverse mode again.

Note: When re-adjusting, be sure to return the tracking control knob to the center position.

www.freeservicemanuals.info

4-2. ADJUSTMENT FOR REMOVAL OR REPLACEMENT OF THE ACE ASSEMBLY

Perform the following adjustments after removing or replacing the ACE assembly.

4-2-1. Tracking Adjustment

1) Position the parallel plate (Jig, SL-0657) as shown in Fig. 4-9, and turn audio head lateral adjustment screw (1) to adjust the audio head vertically.

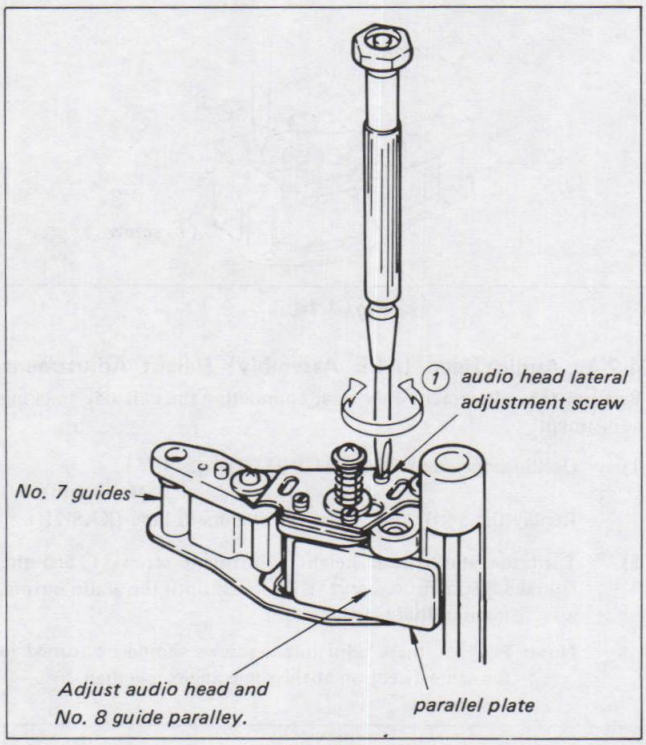

Fig. 4-9.

2) Turn the tracking control knob counterclockwise to lower the RF output waveform to about 60% of the maximum.

3) Play back the tracking portion of the alignment tape (KR5-2H), raise No. 7, 8 guides about 0.3 mm, and check the exit free waveform of the RF output waveform.

Note: Be sure that the tape does not touch the bottom flange of the ACE assembly.

i) If the waveform is within the range illustrated in Fig. 4-7(a), (b), proceed with the adjustment.

ii) If the exit free waveform appears as shown in Fig. 4-10, turn the ACE lateral adjustment screw clockwise until the waveform is within the range illustrated in Fig. 4-7(a), (b).

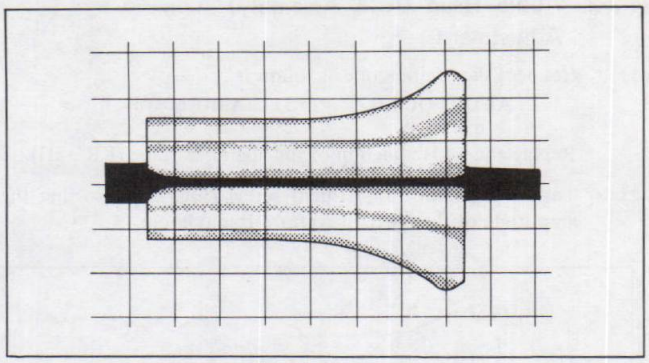

Fig. 4-10.

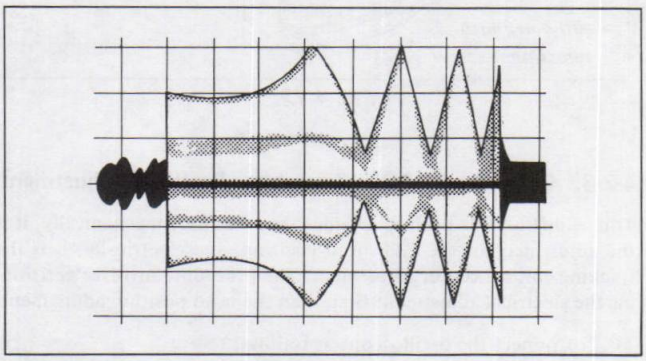

Fig. 4-11.

iii) If the exit free waveform appears as shown in Fig. 4-11, turn the ACE lateral adjustment screw couter-clockwise to obtain the waveform shown in Fig. 4-10, then turn clockwise again until the waveform is within the range shown in Fig. 4-7.

Note: The 3 audio head adjustment screws must be turned clockwise to adjust.

4) Turn the No. 7 guide to flatten the waveform, and match the No. 8 guide to the tape. (Lower the guide until the point just before curl appears at No. 8 guide flange.)

5) If the RF output waveform is as shown in Fig. 4-10, where the exit side is not flat, lower No. 7, No. 8 guides again to flatten it.

www.freeservicemanuals.info

4-2-2. Audio Head (ACE Assembly) Azimuth Adjustment

1) Connect the oscilloscope as follows:
AUDIO OUT .... TP511 (AM-1 board)

Replay the 5 kHz portion of the alignment tape (KR5-2H).

2) Turn the azimuth adjustment screw (Fig. 4-12) so that the amplitude of the 5 kHz waveform is maximum.

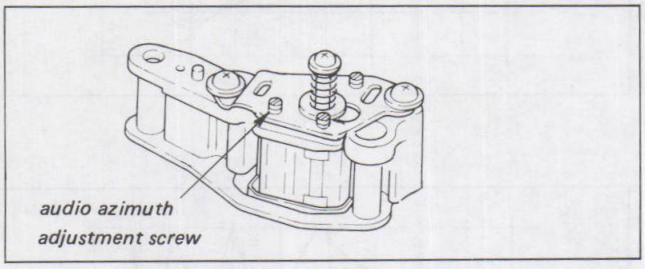

Fig. 4-12.

4-2-3. CTL Head (ACE Assembly) Position Adjustment

This adjustment is both mechanical and electric: mechanically, it is the adjustment of the CTL head position, and electrically, it is the tracking control center adjustment. The procedure involves performing the electrical adjustment first, then the head position adjustment.

1) Connect the oscilloscope as follows:
CH-1 RF OUT ... TP1 (RP-7 board)
CH-2 AUDIO OUT ... TP511 (AM-1 board)

2) Play back the tracking portion of the alignment tape (KR5-2H).

3) Turn the tracking control knob back and forth, and confirm that the output waveform level is maximum at the center click position, and that the 0 level of the audio signal is at the point where the RF output waveform Bch waveform appears, as shown in Fig. 4-13.
If adjustment is necessary, proceed as follows.

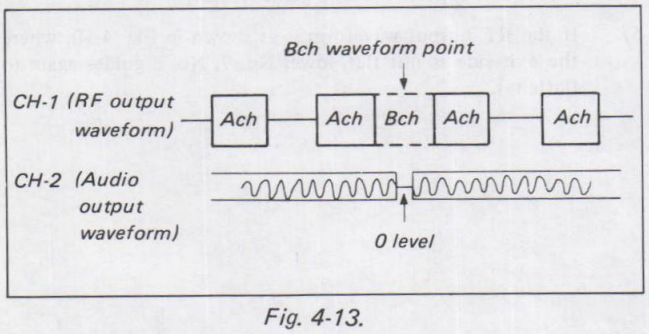

Fig. 4-13.

4) Tracking Control Center Adjustment

5) CTL Head Position Adjustment
Set the tracking control knob at the center click position and loosen the two ACE assembly position adjustment screws (1). As shown in Fig. 4-14, slide the ACE assembly with a screwdriver until it is in the position shown in Fig. 4-13 and the RF output waveform is maximum. Tighten the screws when this position is obtained.

6) Replay the color bars of the alignment tape and check the picture quality.

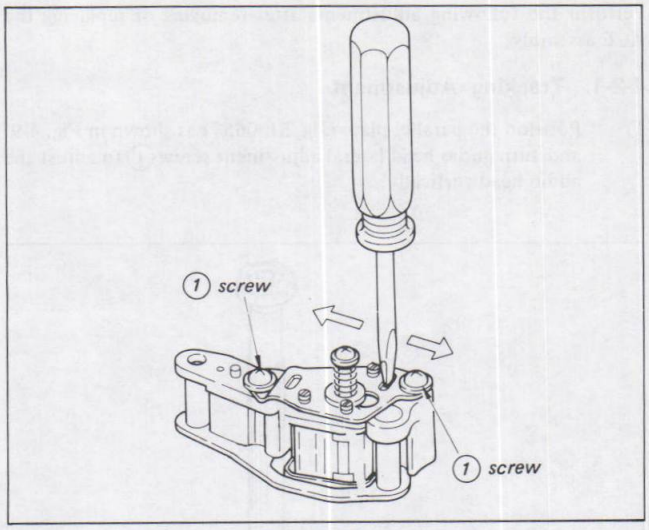

Fig. 4-14.

4-2-4. Audio Head (ACE Assembly) Height Adjustment

Perform this adjustment only after completing the exit side tracking adjustment.

1) Oscilloscope connection: AUDIO OUT ... TP511 (AM-1 board)
Replay the 5 kHz portion of the alignment tape (KR5-2H).

2) Turn the audio head height adjustment screw (1) and the lateral adjustment screw (2) (Fig. 4-15) until the audio output waveform amplitude is maximum.

Note: Both of these adjustment screws should be turned in the same direction at the same angle, less than 30°.

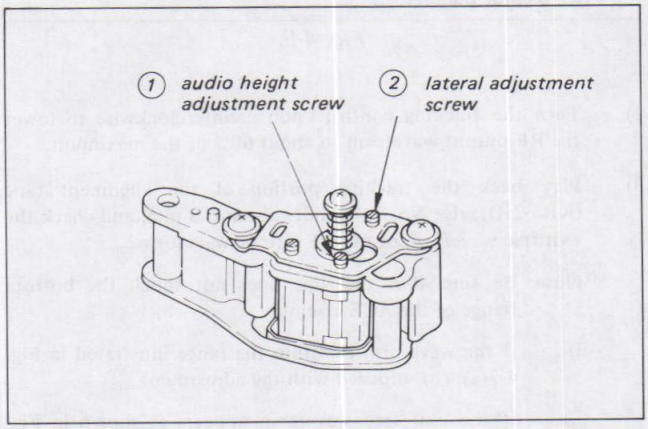

Fig. 4-15.

www.freeservicemanuals.info

4-3. ADJUSTMENT FOR REMOVAL OR REPLACEMENT OF THE CAPSTAN MOTOR

1) Perform the vertical adjustment of the capstan shaft according to 3-4, Replacement and Adjustment of Capstan Motor.

2) Play back the tracking portion of the alignment tape (KR5-2H). Connect the oscilloscope as follows:

RF OUT . . . . . TP1 (RP-7 board)

3) Turn the tracking control knob clockwise to lower the RF output waveform to about 60% of the maximum.

4) Raise No. 7, 8 guides a little, and check the exit free waveform.

i) If the exit free waveform is within the range indicated in Fig. 4-16(a), (b), proceed from step 5).

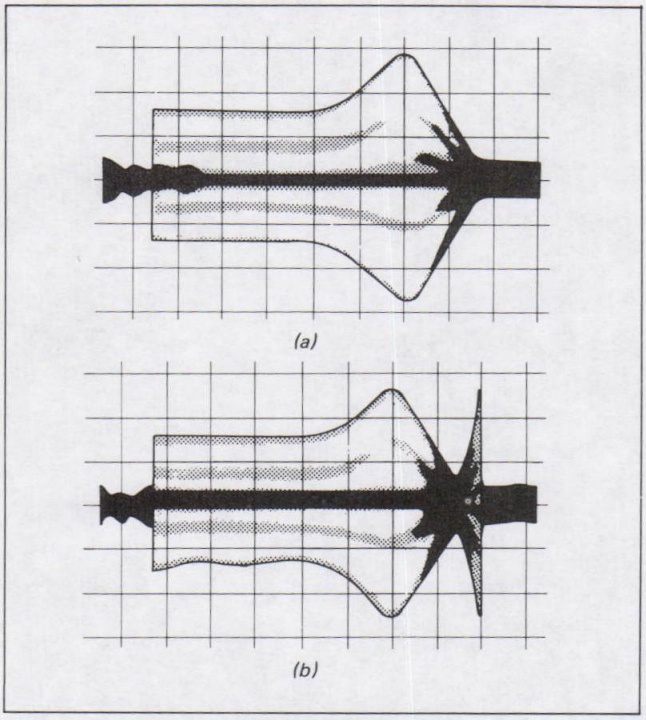

Fig. 4-16.

ii) If the peak of the exit free waveform is smaller than that illustrated in Fig. 4-16(a) (e.g. Fig. 4-17), loosen the lock screw, then turn the capstan adjustment screw until the waveform is within the specified range.

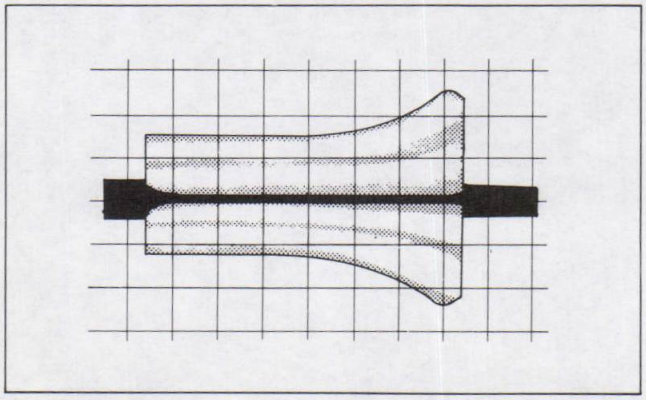

Fig. 4-17.

iii) If the peak shape of the exit free waveform differs from that shown in Fig. 4-16(b) (e.g. Fig. 4-18), loosen the lock screw, then turn the capstan adjustment screw clockwise until the waveform is within the specified range.

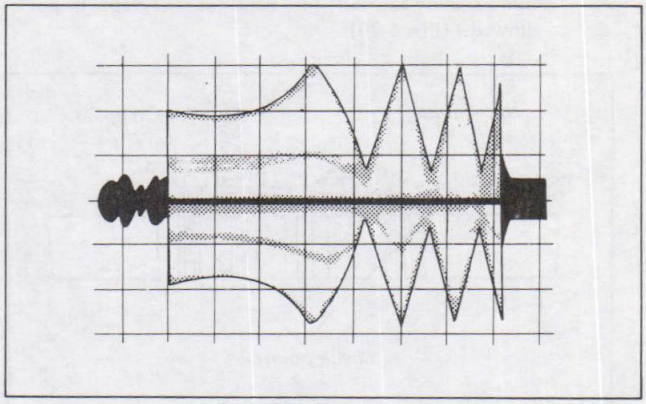

Fig. 4-18.

Note: After turning the capstan adjustment screw, wait until the waveform stabilizes (about 10 – 15 seconds) before continuing with the adjustment.

5) Lock the capstan lock screw. (Turn clockwise until it stops, then turn about 30° more. At this point, the exit free waveform will change slightly, and if it goes out of the range shown in Fig. 4-16(a), (b) return to step 4) and re-adjust.

6) Flatten the waveform with No. 7 guide, and match No. 8 guide to the tape. If the exit waveform rises, flatten it again with No. 7 guide and match No. 8 guide to the tape again.

7) Confirm and adjust according to 4-1-3, exit side adjustment procedure items 4), 5).

4-4. THIN TAPE RUNNING CHECK METHOD DURING TAPE PATH ADJUSTMENT

After adjusting and confirming the tape path by using the alignment tape KR5-2H according to the service manual, check the thin tape running by the procedure given below.

1) Prepare one reel of the commercial L-830. Remove the cassette lid with reference to Figure 4-1 in the service manual.

2) Run L-830 prepared in the procedure 1 in the playback mode and check the following points:

i) Entrance Side

Check if the tape bends and is damaged on the No. 4 guide bottom flange, the No. 5 guide top flange and the No. 6 guide top flange. (The curl of the tape is allowed, but the bend of the tape is not allowed.) (Fig. 4-19)

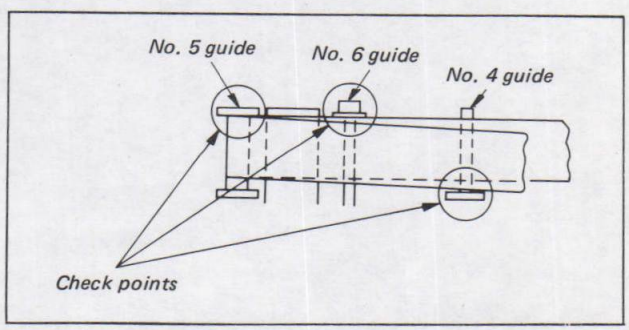

Fig. 4-19.

www.freeservicemanuals.info

ii) Exit side
Check if the tape bends and is damaged on the No. 7 guide top flange, the No. 8 guide top flange and the No. 10 guide top and bottom flanges. (The curl of the tape is allowed, but the bend of the tape is not allowed.) (Fig. 4-20)

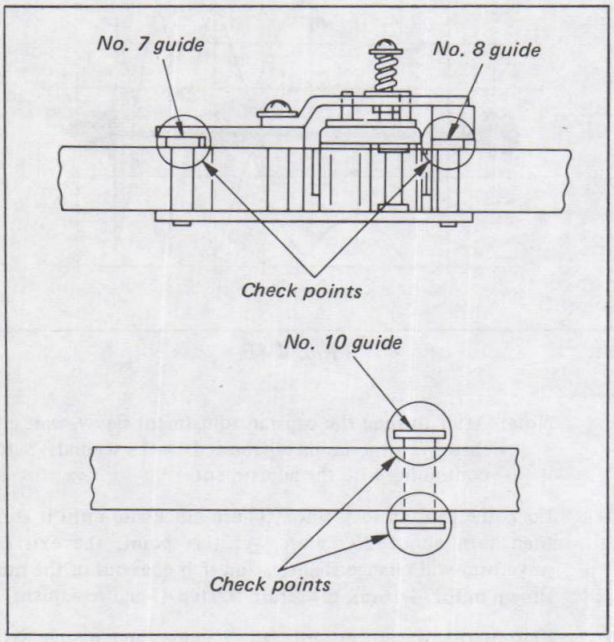

Fig. 4-20.

3) If the tape did not run normally in the procedure 2, readjust the tape path by using KR5-2H according to the service manual.
When the tape did not run normally on the entrance side, refer to 4-1-2 in the service manual.
When the tape did not run normally on the exit side, refer to 4-1-3 in the service manual.

www.freeservicemanuals.info

SECTION 5
ELECTRICAL ALIGNMENT

All the electrical alignment can be performed by using the equipment mentioned below, the alignment tape, and the PAL colour bar signal (100%).

[Equipment Required]

(1) Colour Monitor TV

(2) Oscilloscope, Dual-trace, Bandwidth . . .more than 10 MHz with delay mode

(3) Frequency Counter

(4) PAL Colour-Bar Generator

(5) Digital voltmeter

(6) VOM (20 KΩ/V)

(7) Audio Signal Generator

(8) Vectorscope

(9) Attenuator

(10) Alignment Tape, type: KR5-2H, Code No. 8-969-995-52

(11) Alignment Tool (Adjusting screwdriver for semi-fixed resistors and coils)
Jig No. SL-0001, Code No. J-6080-001-A

[Setup for Alignment]

The antenna should be connected correctly to the antenna input terminal of the videocassette recorder.

It is important that the video output signal satisfies the specification because the telecast signal received by the incorporated tuner of the videocassette recorder is utilized as the adjustment signal of the machine. The incorporated tuner should be set to the channel with the best reception. The video signal should be checked with an oscilloscope connected to VIDEO OUT (BNC connector). Verify that the sync signal amplitude is approx. 0.3 Vp-p and the video signal amplitude is approx. 0.7 Vp-p at peak. Adjust the fine tuning while observing the signal and the TV screen so that the burst signal amplitude becomes approx. 0.3 V ± 0.1 Vp-p. Also confirm that there is not spiles observed at the sync signal portion. (See Fig. 5-1.)

The video (colour bar) signal for the alignment is shown in Fig. 5-1.

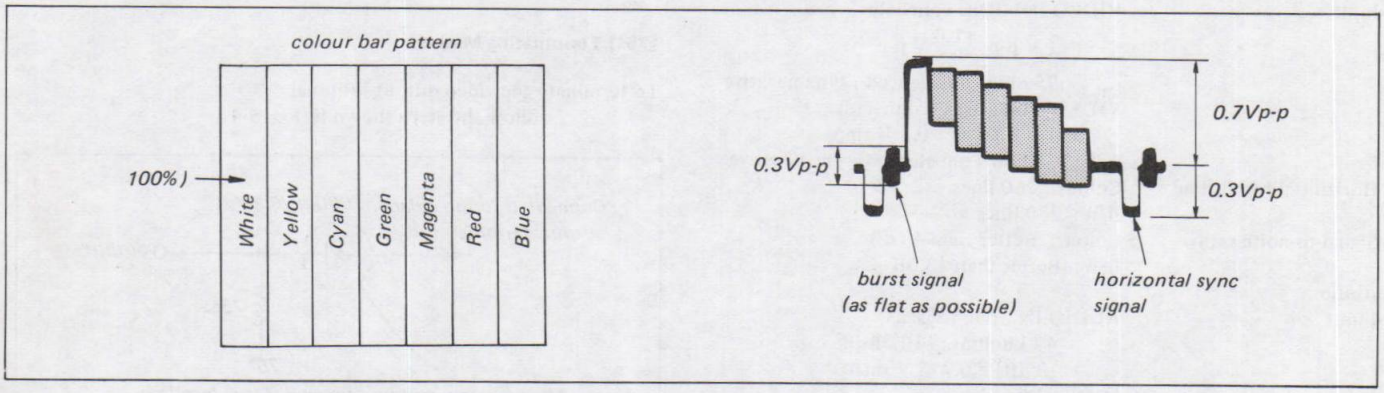

Fig. 5-1 Video (colour bar) signal

[Alignment Tape]

KR5-2H

	Video signal	Audio signal	Playing time	Use for
1.	Colour bars	3 kHz −5dB	5 min	General performance, tape speed checks, switching position adjustment.
2.	Monoscope	333 Hz −25dB	5 min	Video head dihedral, audio level adjustment.
3.	RF sweep	5 kHz −25dB	5 min	Video, audio frequency characteristics, audio azimuth adjustment marker: 1, 2, 3.58, 4.5, 5.2 MHz
4.	Tracking 1 MHz (CH-A) *1 (Channel B is inserted in every 3 frames.)	1 kHz −5dB *2 (Signal is dropped out in the positions where channel B is inserted.)	5 min	Tracking, Audio height adjustments CTL Position check (Check if *1 and *2 are the same position.)

Note: Use KR5-2H for alignment tape.
KR5-1H, however, is also usable KR5-2H has the improved characteristics.

www.freeservicemanuals.info

[VR Alignment Tool Screwdriver]

Use the tool screwdriver supplied for alignment of semi-fixed VRs and inductances on each printed circuit board. An ordinary screwdriver is too large and is difficult to use when adjusting VRs from the print pattern side of a board. The special alignment tool screwdriver is shown in Fig. 5-2 .

The metal blade of the screwdriver is used for variable resistors and trimmer capacitors.

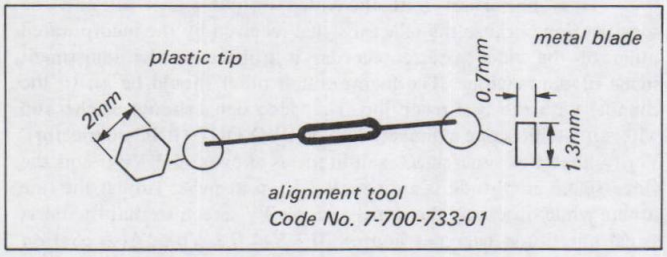

Fig. 5-2. Alignment tool screwdriver

[Required levels and Impedances of Input and Output]

Video

Input	VIDEO IN: BNC connector 1 V p-p $^{+1.0}_{-0.5}$ V p-p 75 ohms unbalanced . sync negative VIDEO OUT: BNC connector 1.0 V (p-p) ± 0.1 V (p-p) 75 ohms unbalanced. sync negative
Horizontal resolution	Colour: 260 lines B/W: 280 lines
Signal-to-noise ratio	Colour: Better than 40 dB B/W: Better than 43 dB

Audio

Input	AUDIO IN: phono jacks 47 kilohms, −10 dBs (0 dBs = 0.775 V rms) MIC: mini jacks −60 dBs, suitable for microphones with 600 ohm impedance
Output	AUDIO OUT: phono jacks Load impedance less than 10 kilohms −5 dBs with 47 kilohms load unbalanced

[Colour Bar Signa]

The 100% colour bar signal recorded on the Alignment tape is shown in Fig. 5-3 .

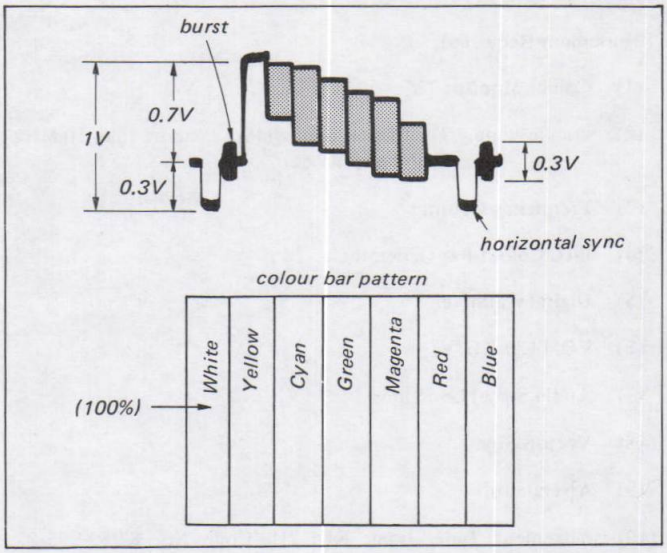

Fig. 5-3. Colour bar signal recorded on the alignment tape

[75Ω Terminating Method]

To terminate the video output terminal follow the steps shown in Fig. 5-4.

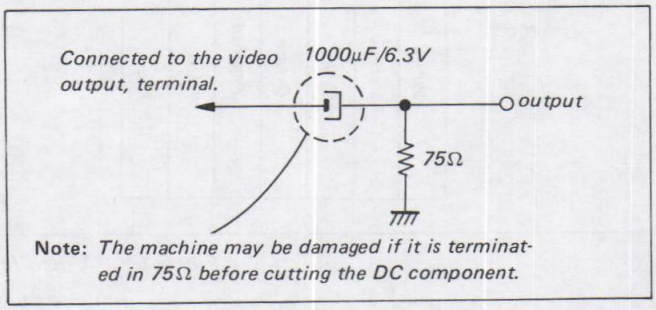
Connected to the video output, terminal.
1000μF/6.3V
output
75Ω
Note: The machine may be damaged if it is terminated in 75Ω before cutting the DC component.

Fig. 5-4. 75Ω terminating circuit

www.freeservicemanuals.info

[Adjustment procedure]

Adjust in the order given below.

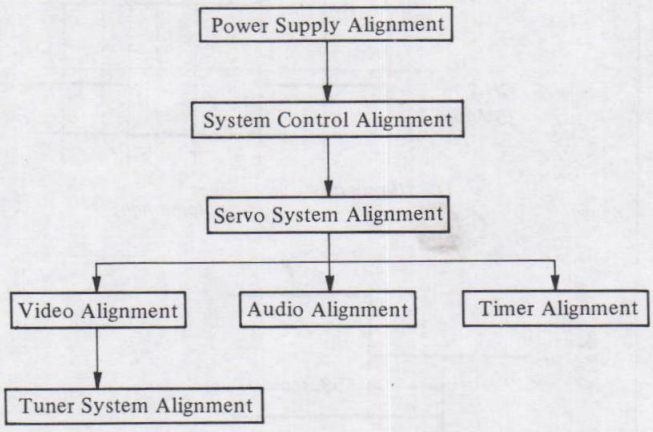

5-1. POWER SUPPLY CHECK (SS-11 Board)

Measure an E-E mode (power supply switch ON).

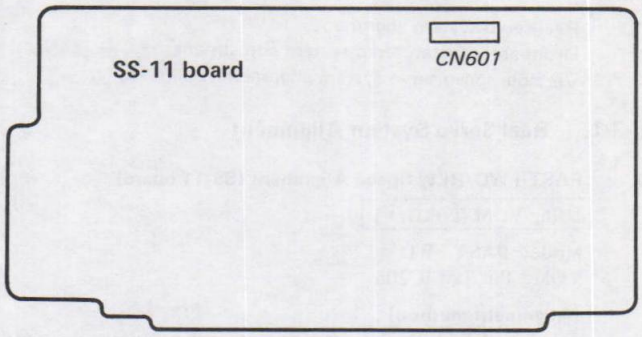

Fig. 5-5. Component layout

1. Unswitched 12V Check
   Pin 8 of CN610 shall be 12.6 ± 0.9V.
2. Switched 12V Check
   Pin 7 of CN610 shall be 12.6 ± 0.2V
3. REG 9V Check
   Pin 3 of CN610 shall be 9.0V ± 0.2V
4. Switched 5V Check
   Pin 1 of CN610 shall be 5V ± 0.35V

5-2. SYSTEM CONTROL CHECK (SS-11 Board)

1. **Clock Frequency Check**
   Mode: E-E
   Signal: None
   Frequency counter: Pin 10 of IC
   Check: f: 4MHz
   V_1: less than 0.8V V_2: more than 3.4Vp-p

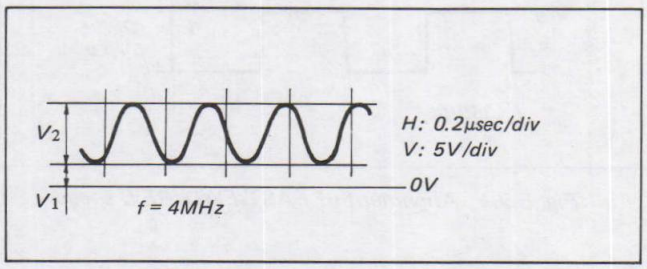

Fig. 5-6. Clock frequency

www.freeservicemanuals.info

5-3. SERVO SYSTEM ALIGNMENT (SS-11 and JR-1 boards)

Alignment Sequence

1. Reel servo system alignment
2. Drum and capstan servo system adjustment
3. Variable speed servo system alignment

5-3-1. Reel Servo System Alignment

1. FAST-FWD/REW Speed Alignment (SS-11 board)

Using VOM (20kΩ/V)

Mode: FAST-FWD
VOM: Pin 7 of IC205

[Alignment method]

(1) FAST-FWD the tape center section (with the tape wound equally on T- and S-side reels)
(2) Adjust to 4.3V ± 0.2V with RV001
(3) Set up the REW mode at the tape center section.
(4) Check that VOM shows 4.3V ± 0.5V.

Using frequency counter:

Mode: FAST-FWD
Frequency counter: TP002 (D202 anode)

[Alignment method]

(1) FAST-FWD the tape center section (with the tape wound equally on T- and S-side reels)
(2) Adjust to 380Hz ± 30Hz with RV001
(3) Connect the frequency counter to the TP001 (anode of D201)
(4) Set up the REW mode at the tape center section.
(5) Check that the frequency is 380Hz ± 50Hz.

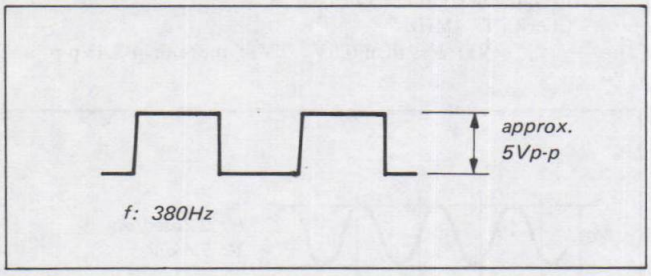

Fig. 5-7. Alignment of FAST-FWD/REW speed

2. FWD Back Tension Alignment (SS-11 board)

See "Mechanical Adjustment"

5-3-2. Drum and Capstan Servo System Alignment

1. Drum Free Speed Adjustment (SS-11 board)

Mode: Record
Signal: Alignment tape color bar, or monoscope
Oscilloscope: CH-1 TP306 (Pin 13 of IC301)
CH-2 TP304 (Pin 39 of IC301)

[Alignment method]

Adjust to 553μsec ± 10μsec with RV302 (See Fig. 5-8.)

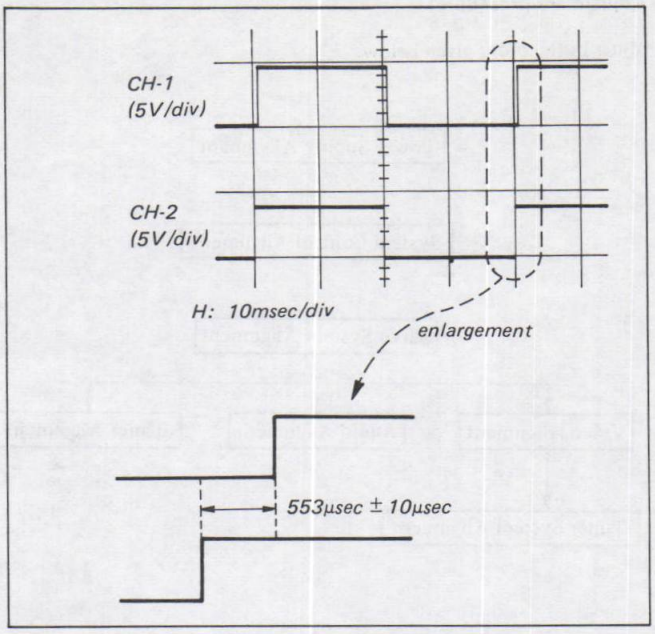

Fig. 5-8. Drum free speed adjustment

2. H. Jitter Adjustment

Mode: Playback + Pause
Signal: Alignment tape colour bar

[Adjustment method]

(1) While watching the monitor screen, adjust RV319 until horizontal jitter is reduced to a minimum.

3. PICTURE SEARCH, Drum Free Speed Adjustment (SS-11 board)

- Adjust both FWD/REVERSE mode.
- REVERSE is indicated by ( ).

Mode: PICTURE SEARCH (FWD/REVERSE)
Signal: Alignment tape color bar or monoscope
Frequency counter: Pin 2 of CN305

[Adjustment method]

Adjust to 15.625kHz ± 0.05kHz with RV303 (RV318) (See Fig. 5-9.)

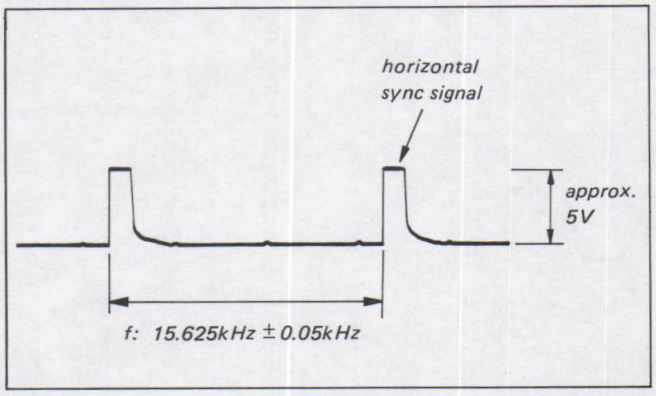

Fig. 5-9. PICTURE SEARCH, drum free speed adjustment

www.freeservicemanuals.info

4. Capstan DC Bias Adjustment (SS-11 board)

Mode: Playback
Signal: Alignment tape colour bar or monoscope
Oscilloscope: TP302 (Pin 20 of IC301)

[Adjustment method]

Adjust to the relevant duty (ratio for A and B) in the play mode with the RV as shown in Table 1.

Playback Mode	Adjustment RV	Duty
PB	RV309	50%
DOUBLE SPEED	RV307	50%

Table 1.

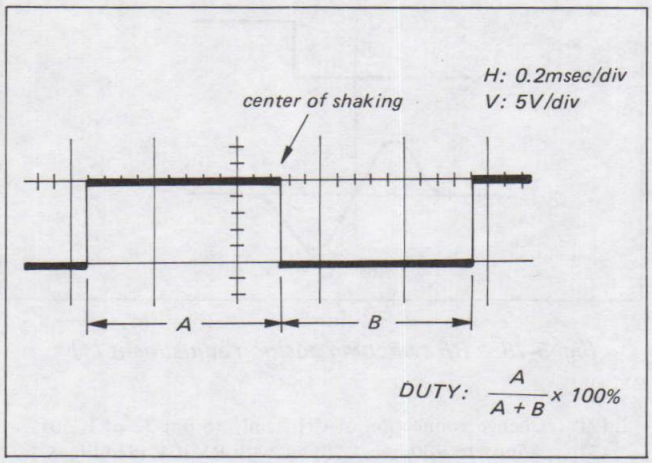

Fig. 5-10. Capstan DC bias adjustment

5. PICTURE SEARCH, Capstan DC Bias Adjustment (SS-11 board)

Mode: PICTURE SEARCH (FWD)
Signal: Alignment tape colour bar or monoscope
Oscilloscope: TP302 (Pin 20 of IC301)

[Adjustment method]

(1) Adjust the duty (ratio for A and B) to 50% with RV310.

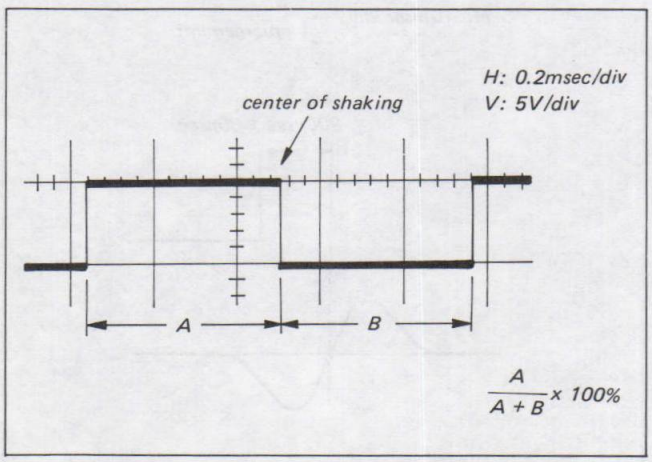

Fig. 5-11. PICTURE SEARCH, capstan DC bias adjustment

(2) The number of noise bars on the monitor TV screen shall be 4, and the bars must be stationary.
(3) Then, in the REVIEW mode, there must be 5 stationary noise bars on the monitor screen.

6. Tracking Center Adjustment (SS-11 board)

Mode: Playback
Signal: Alignment tape colour bar, or monoscope
Oscilloscope: CH-1 TP306 (Pin 13 of IC301)
CH-2 TP303 (Pin 15 of IC301)

[Adjustment method]

(1) Set the TRACKING knob to the center click position.
(2) Adjust to 7.05msec ± 0.05msec with RV305. (See Fig. 5-12.)

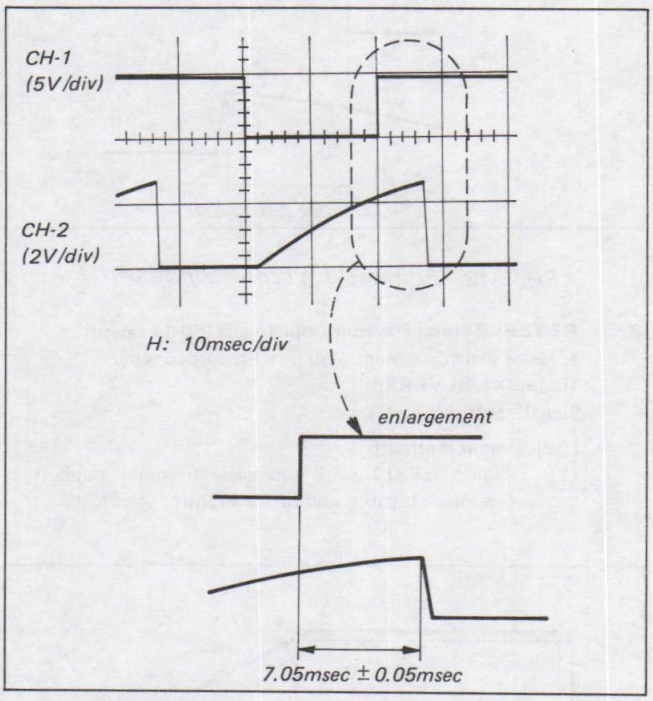

Fig. 5-12. Tracking center adjustment

7. Edit Tracking Center Adjustment (SS-11 board)

Mode: STOP
Signal: Alignment tape colour bar or monoscope
Oscilloscope: CH-1 TP306 (Pin 13 of IC301)
CH-2 TP303 (Pin 15 of IC301)

[Adjustment method]

(1) Adjust to 7.05msec ± 0.05mse with RV314.

www.freeservicemanuals.info

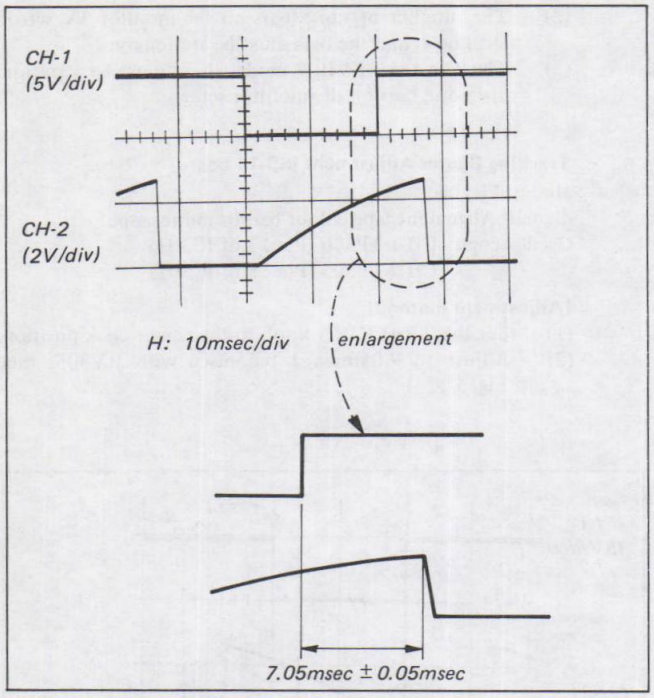

Fig. 5-13. Edit tracking center adjustment

8. REVERSE Noise Position Adjustment (SS-11 board)

- Make this adjustment with a self-recorded tape.

Mode: X1 REVERSE
Signal: Self-recorded tape

[Adjustment method]

(1) Adjust RV317 until the noise becomes smallest at the top or bottom end of the monitor screen.

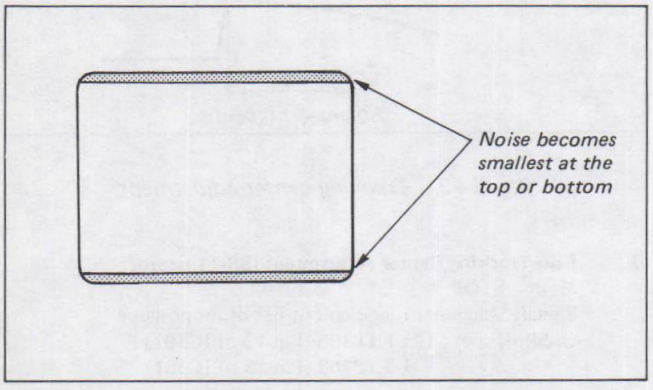

Fig. 5-14. Reverse noise position adjustment

9. RF Switching Position Adjustment (SS-11 board)

Mode: Playback
Signal: Alignment tape colour bar or monoscope
Oscilloscope: CH-1 TP304 (Pin 39 of IC301)
CH-2 Pin 40 of IC301)

[Adjustment method]

(1) Adjust to 900μsec ± 30μsec with RV301. (See Fig. 5-15.)

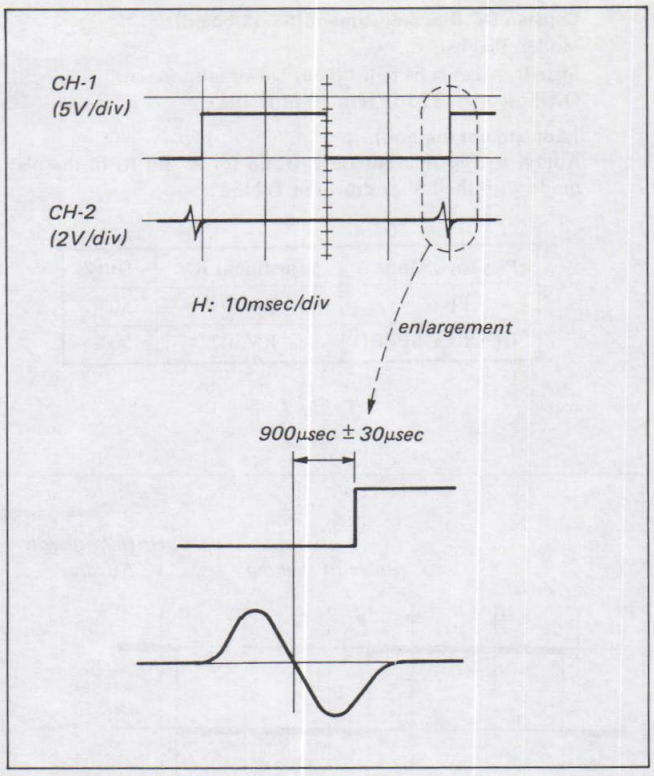

Fig. 5-15. RF switching position adjustment (1)

(2) Change connection of CH-2 only to pin 32 of IC301.
(3) Adjust to 900μsec ± 30μsec with RV304. (See Fig. 5-16.)

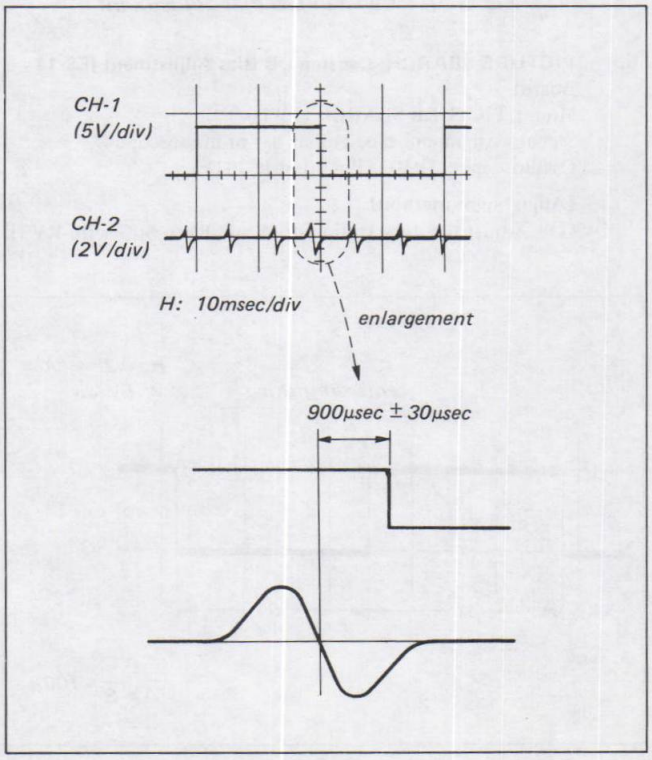

Fig. 5-16. RF switching position adjustment (2)

www.freeservicemanuals.info

10. FG Amp DC Bias Adjustment (SS-11 board)

Mode: Playback + X2 (double speed)
Signal: Alignment tape colour bar or monoscope

[Adjustment method]

(1) The voltage at TP308 (Pin 11 of IC408) is V1.
(2) With TP317 and TP313 shorted, the voltage at TP308 is V2.
(3) Adjust RV316 to attain V1 = V2.
(4) The voltage at TP309 (Pin 7 of IC306) is V3.
(5) With TP317 and TP313 shored, the voltage at TP309 is V4.
(6) Adjust RV315 until V3 = V4.

5-3-3. Variable Speed Servo Adjustment

1. FG Bias Adjustment (JR-1 board)

Mode: Recording
Signal: Any signal
Oscilloscope: TP2 (Pin 11 of IC4)

[Adjustment method]

(1) Reduce the shaking width to a minimum by RV3.

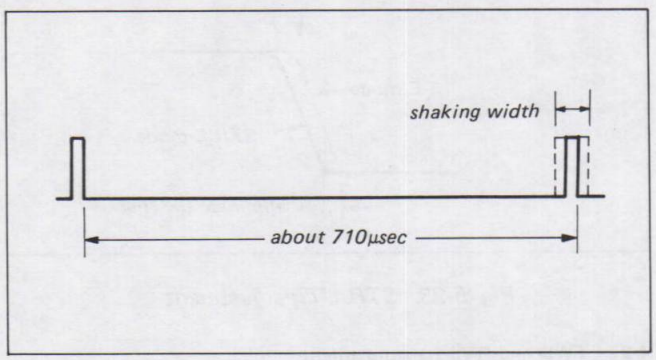

Fig. 5-17. FG bias adjustment

2. Position Signal Adjustment (JR-1 board)

• Record any signal in the βII mode.
Mode: Playback
Oscilloscope: CH-1 TP3 (Pin 1 of IC3)
CH-2 TP4 (Pin 4 of IC13)

[Adjustment method]

(1) Reduce the step to a minimum by RV2.

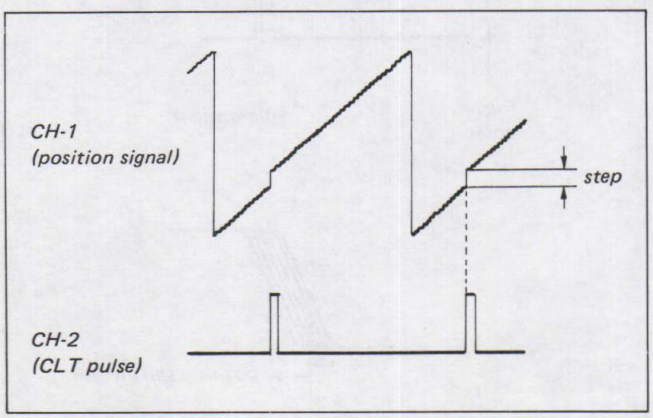

Fig. 5-18. Position signal adjustment

3. Slow Motion Adjustment (JR-1 board)

3-1. Brake Width Adjustment

• Record an arbitrary signal
Mode: 1/5 RVS slow motion
Oscilloscope: CH-1 TP3 (Pin 1 of IC3)
CH-2 TP7 (Pin 10 of IC9)

[Adjustment method]

(1) Turn RV9 full counterclockwise (↺) as viewed from the pattern side. (In this state, the pulse width of CH-2 will be minimum.)
(2) Turn RV9 clockwise (↻) to eliminate the step.

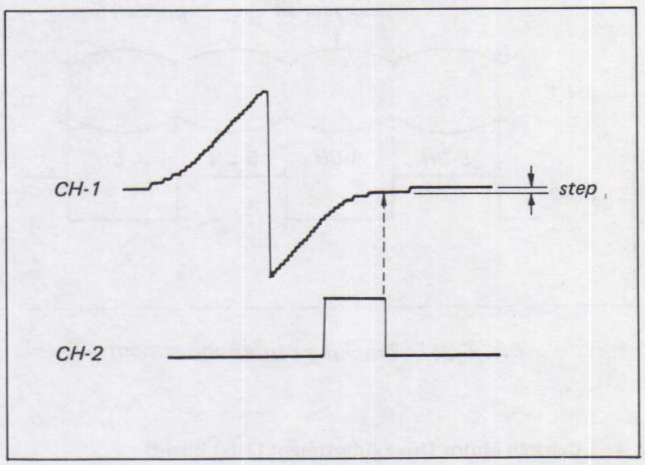

Fig. 5-19. Brake width adjustment

3-2. Brake Position Adjustment

• Record an arbitrary signal
Mode: 1/5 RVS slow motion
Oscilloscope: TP3 (Pin 1 of IC3)

[Adjustment method]

(1) Adjust to 1.6V ± 0.1V DC by RV4

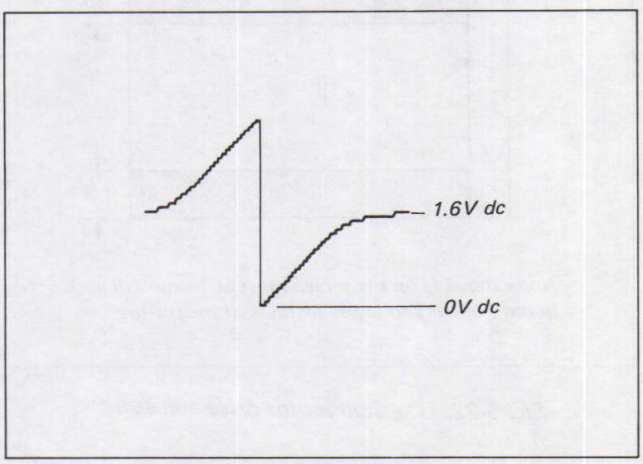

Fig. 5-20. Brake position adjustment

www.freeservicemanuals.info

3-3. Tracking Center Adjustment (JR-1 board)

- Record an arbitrary signal

Mode: 1/5 FWD slow motion
Oscilloscope: CH-1 TP1 on RP-7 board
CH-2 Pin 1 of CN2 on JR-1 board

[Adjustment method]

(1) Set the slow tracking knob at the center click position.
(2) Adjust the waveform peak to be in center of A-CH by RV16.

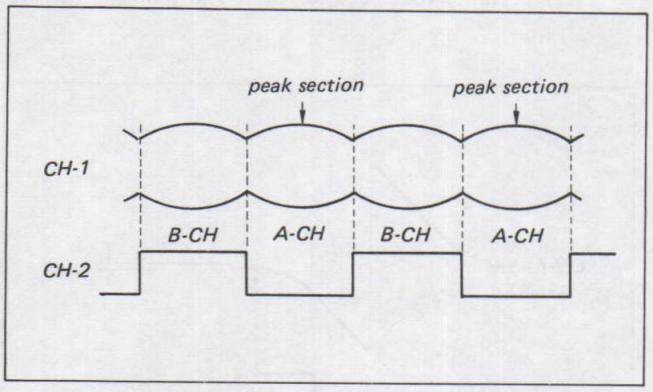

Fig. 5-21. Tracking center adjustment

3-4. Capstan Motor Drive Adjustment (JR-1 board)

- Record an arbitrary signal

Mode: 1/5 RVS slow motion

[Adjustment method]

(1) Adjust to conceal noise below or above the screen as best as you can by RV17 while watching the monitor TV set.
(2) Make sure that is no noise when in the still mode.

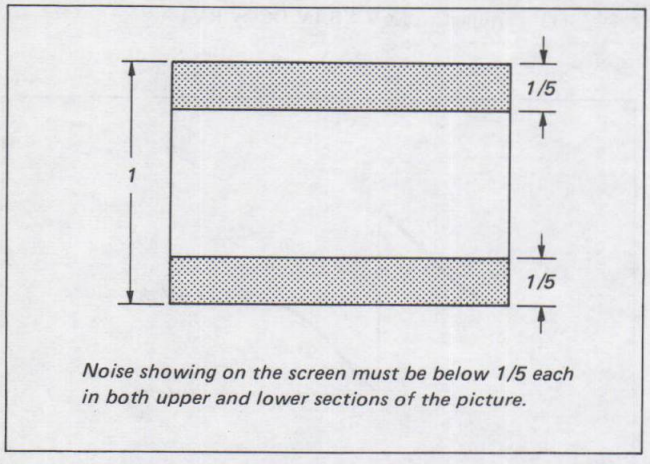

Fig. 5-22. Capstan motor drive adjustment

(3) There shall be no noise in the 1/10 FWD slow motion mode. Make sure that noise in the 1/5 REV slow motion and 1/10 RVS slow motion modes is within the range shown in Fig. 5-22.)

4. Drum Shift Adjustment (JR-1 board)

4-1. STILL f_H Adjustment

Mode: STILL
Signal: Alignment tape colour bar signal, or monoscope signal
Oscilloscope: TP318 on SS-11 board

[Adjustment method]

(1) Adjust f_H during the STILL mode by RV1 to be equal to f_H in the E-E mode.

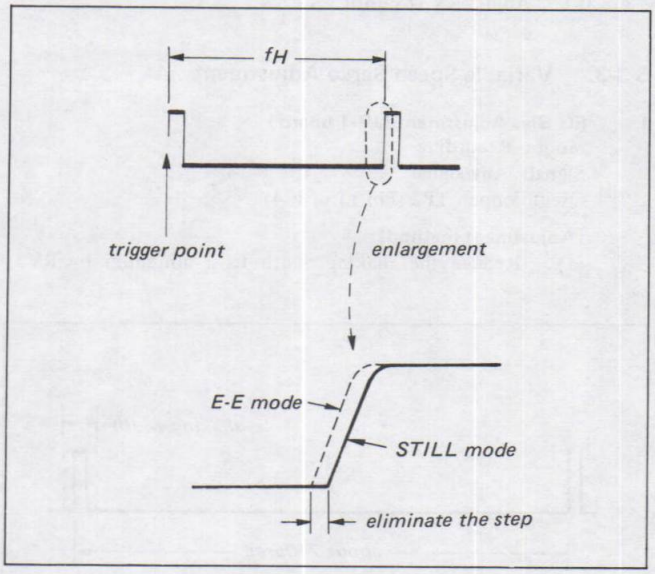

Fig. 5-23. STILL f_H adjustment

4-2. FWD and RVS f_H Adjustment

Mode: FWD 1/5 slow motion
Signal: Alignment tape colour bar
Oscilloscope: TP318 on SS-11 board

[Adjustment method]

(1) Adjust RV13 until the to-and-fro position shift becomes a minimum.

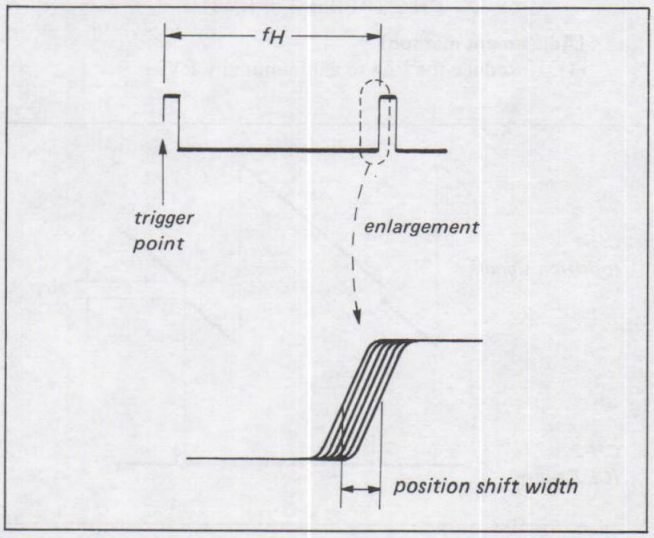

Fig. 5-24. f_H adjustment

www.freeservicemanuals.info

(2) Switch over to the RVS 1/5 slow motion mode.
(3) Adjust RV12 until the to-and-fro position shift width becomes a minimum.
(4) Repeat adjustments (1) through (3) 2 to 3 times.

5. V Jitter Adjustment (JR-1 board)

Mode: X1 RVS
Signal: Alignment tape colour bar or monoscope
Oscilloscope: CH-1 TP5 (Pin 11 of IC7)
CH-2 TP9 (Pin 21 of IC5)

[Adjustment method]

(1) Adjust RV11 until the distance shown below on the oscilloscope screen becomes 232μsec ±10μsec.

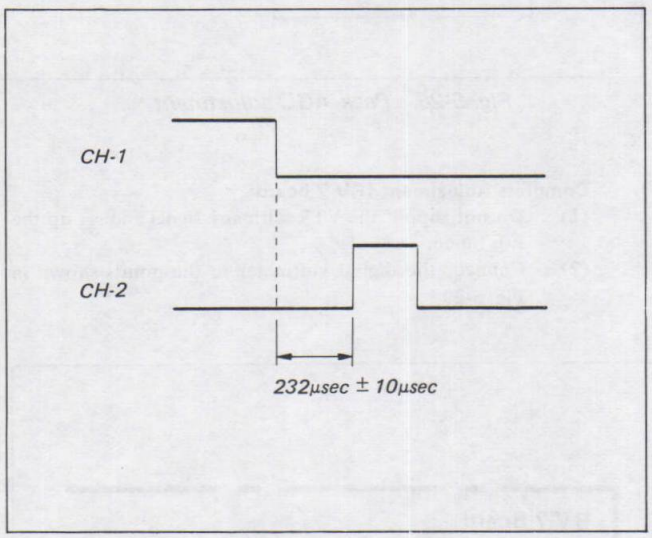

Fig. 5-25. V jitter adjustment

6. Edit Adjustment (SS-11, JR-1 board)

Mode: RECORD
Signal: Any convenient signal
Oscilloscope: CH-1 pin 4 of IC301 on SS-1 board
External trigger: pin 21 of IC301 on SS-11 board
Trigger slope: (−)
Input: DC range
Sweep mode: NORMAL

[Adjustment method]

(1) Switch the system to the PAUSE mode, and keep it for 3sec. min.
(2) Push the PAUSE key again to clear the PAUSE mode (adjust the trigger level of the oscilloscope to triggerit), and adjust RV6 on the JR-1 board until the time T between the end of pause to the waveform rise point becomes a maximum.

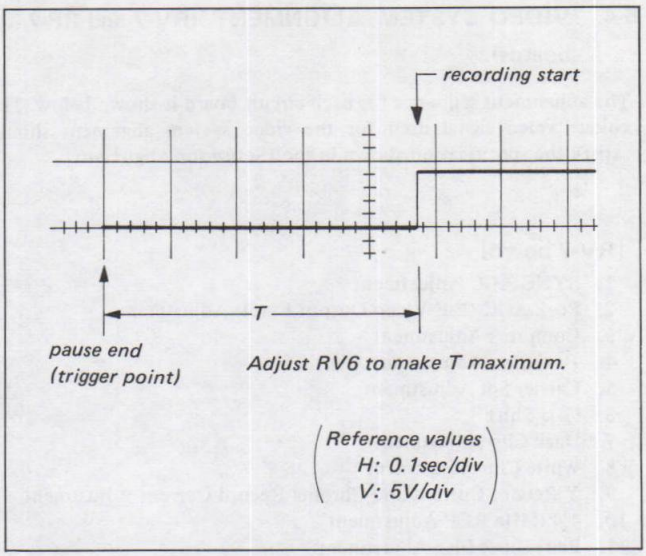

Fig. 5-26. Edit adjustment

(3) Repeat pausing and clearing 2 to 3 times to make sure the conditions under (2) are satisfied.
(4) Self-record and play back, and make sure that noise is absent at the pause junctions.

www.freeservicemanuals.info

5-4. VIDEO SYSTEM ALIGNMENT (RV-7 and RP-7 boards)

The adjustment sequence for each circuit board is shown below. The colour video signal used for the video system alignment should satisfy the specification shown in the [Setup for Alignment].

[RV-7 board]

1. SYNC AGC Adjustment
2. Peak AGC (E-E Video Output Level) Adjustment
3. Compress Adjustment
4. Deviation Adjustment
5. Carrier Set Adjustment
6. $\frac{1}{2}f_H$ Shift
7. Dark Clip Adjustment
8. White Clip Adjustment
9. Y Record Current and Chroma Record Current Adjustment
10. 4.43MHz REF Adjustment
11. Pilot Burst Flag Adjustment
12. ACC Adjustment
13. AFC Adjustment
14. AFC Offset Adjustment
15. Carrier Balance Adjustment
16. Pilot Burst Adjustment
17. Expand Adjustment
18. Playback Y Signal Level Adjustment
19. Y COMB Adjustment
20. Dropout Compensator Threshold Adjustment
21. Comb Filter Adjustment
22. JOG PLL Adjustment
23. CF. T Adjustment
24. EXCH. C. Adjustment
25. SHIFT Adjustment

[RP-7 board]

1. Playback Amplifier Frequency Response Adjustment
2. Playback Y, A'-ch Frequency Response Adjustment

1. SYNC AGC Adjustment (RV-7 board)

(1) Supply the VTR with the colour bar signal and set up the E-E mode.
(2) Connect the oscilloscope to VIDEO OUT.
(3) Tune RV9 fully clockwise (↻) from the pattern side.
(4) Adjust RV002 so that the sync signal level is 300mV ± 15mVp-p. (See Fig. 5-27.)
(5) Perform pilot burst flag adjustment.

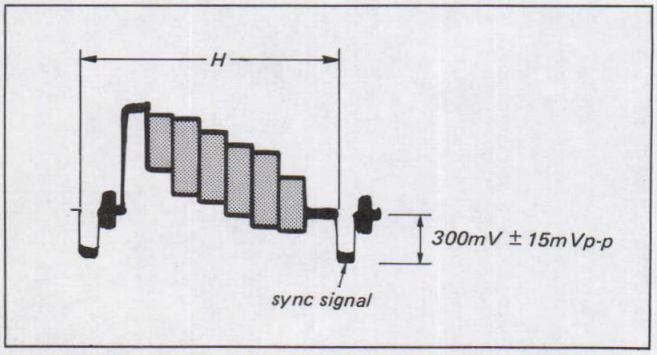

Fig. 5-27. Sync AGC adjustment

2. Peak AGC (E-E Video Output Level) Adjustment (RV-7 board)

(1) Supply the VTR with the colour bar signal and set up the E-E mode.
(2) Connect the oscilloscope to VIDEO OUT.
(3) Adjust RV004 so that the output level of the video signal becomes 1.0V ± 0.05Vp-p (See Fig. 5-28.)

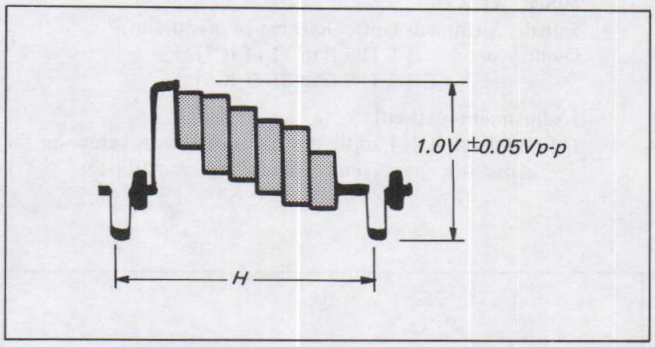

Fig. 5-28. Peak AGC adjustment

3. Compress Adjustment (RV-7 board)

(1) Do not supply the VTR with any signal and set up the E-E mode.
(2) Connect the digital voltmeter to the points shown in Fig. 5-29.

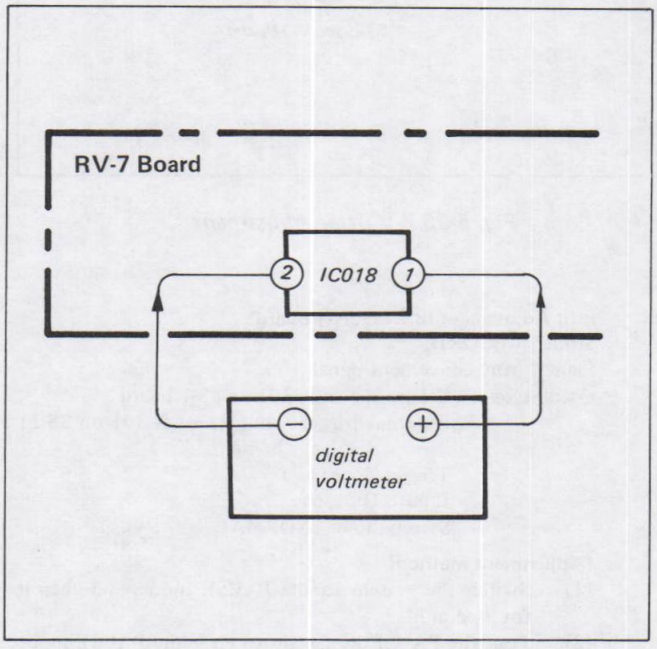

Fig. 5-29. Measurement points

(3) Turn RV023 fully clockwise as seen from the pattern side.
(4) Turn RV022 fully counterclockwise as seen from the pattern side.
(5) Adjust RV025 for 0.3V dc ± 0.01V dc.
(6) Perform white clip and dark clip adjustment.

www.freeservicemanuals.info

4. **Deviation Adjustment (RV-7 board)**
   (1) Supply the colour bar signal and set up the E-E mode.
   (2) Connect the spectrum analyzer to pin 4 of IC015.
   (3) Adjust to 1.4MHz ± 0.04MHz with RV003 (See Fig. 5-30.)

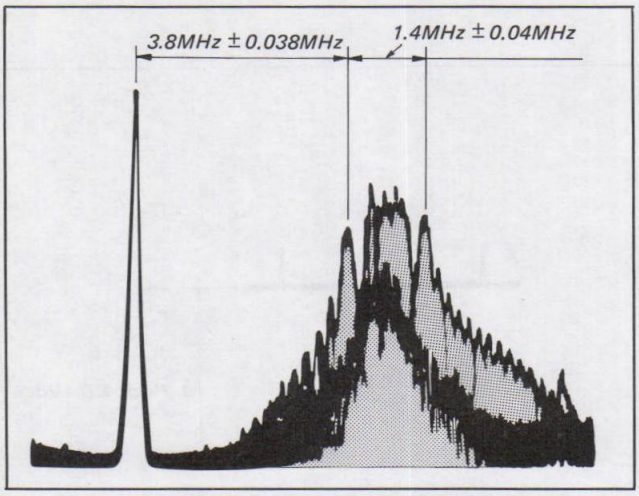

Fig. 5-30. Deviation adjustment

5. **Carrier Set Adjustment (RV-7 board)**
   (1) Supply the colour bar signal and set up the E-E mode.
   (2) Connect the spectrum analyzer to pin 4 of IC015.
   (3) Adjust the sync tip section to 3.8MHz ± 0.038MHz with RV024. (See Fig. 5-30.)

6. **½f_H Shift (RV-7 board)**
   (1) Do not supply the VTR with any signal and set up the RECORD mode.
   (2) Connect the spectrum analyzer to pin 4 of IC015.
   (3) Adjust RV021 so that the fluctuation of frequency is 7.8kHz ± 0.5kHz.

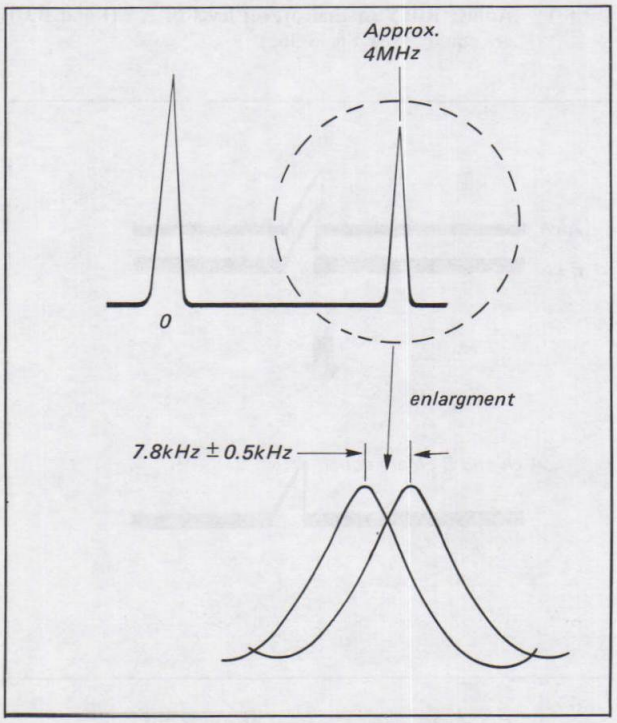

Fig. 5-31. ½f_H shift

7. **Dark Clip Adjustment (RV-7 board)**
   (1) Supply the VTR with the monoscope signal and set up the E-E mode.
   (2) Connect the digital voltmeter to pin 6 of IC18.
   (3) Adjust RV22 for 2.1V ± 0.05V.

8. **White Clip Adjustment (RV-7 board)**
   (1) Supply the VTR with the monoscope signal and set up the E-E mode.
   (2) Connect the digital voltmeter to pin 7 of IC18.
   (3) Adjust RV23 for 1.93V ± 0.05V.

9. **Y Record Current and Chroma Record Current Adjustment (RV-7 board)**

   Mode: Record
   Note: Be careful to set to RECORD mode after first clearing the E-E mode when making this adjustment.
   Signal: colour bar
   Oscilloscope: emitter of Q714
   [Adjustment method]
   (1) Adjust the Y signal level to 0.46V ± 0.02Vp-p with RV017.
   (2) Adjust the C signal level to 0.24V ± 0.01Vp-p with RV016. (See Fig. 5-32.)

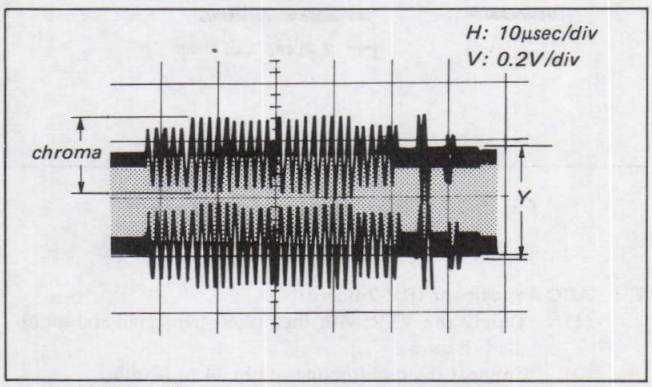

Fig. 5-32. Y record current and chroma record current adjustment

10. **4.43MHz REF Adjustment (RV-7 board)**
    (1) Supply the VTR with the colour bar signal and set up the E-E mode.
    (2) Connect the frequency counter to pin 3 of CN7.
    (3) Adjust CV1 for an oscillating frequency of 4.433619 MHz ± 5Hz.

www.freeservicemanuals.info

11. Pilot Burst Flag Adjustment (RV-7 board)

(1) Supply the VTR with colour bar signal and set up the E-E mode.
(2) Connect the oscilloscope to pin 10 of IC7.
(3) Adjust to 2.2μsec ± 0.1μsec with RV009. (See Fig. 5-33.)

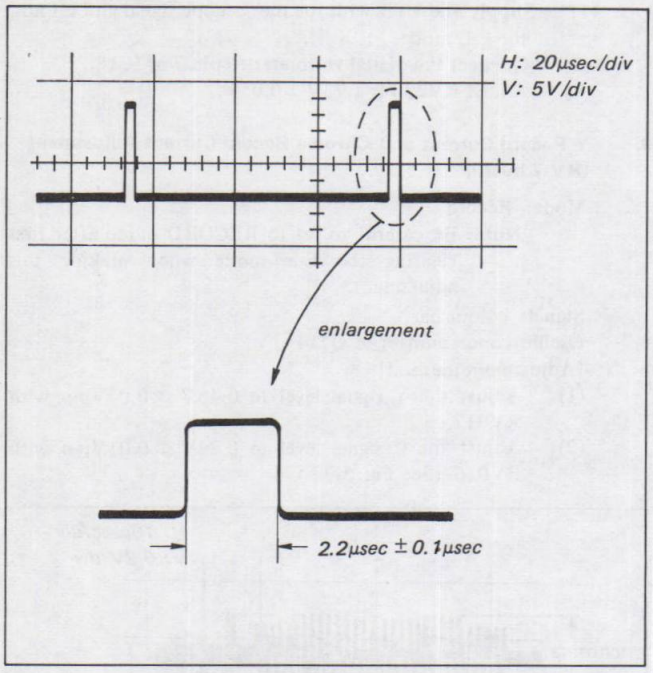

Fig. 5-33. Pilot burst flag adjustment

12. ACC Adjustment (RV-7 board)

(1) Supply the VTR with the colour bar signal and set up the E-E mode.
(2) Connect the oscilloscope to pin 24 of IC008.
(3) Adjust RV010 for 0.68V ± 0.05Vp-p. (See Fig. 5-34.)

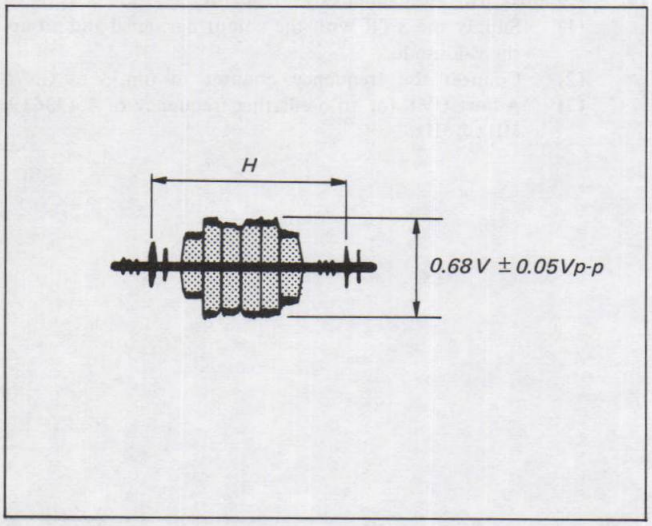

Fig. 5-34. ACC adjustment

13. AFC Adjustment (RV-7 board)

(1) Supply the VTR with the colour bar signal and set up the E-E mode.
(2) Connect the oscilloscope to pin 16 of IC012.
(3) Adjust RV014 for 1.7V dc ± 0.1V dc. (See Fig. 5-35.)

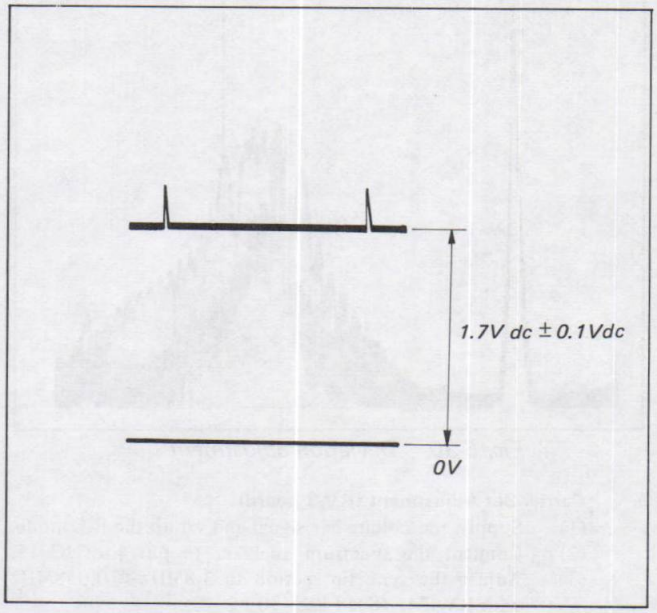

Fig. 5-35. AFC adjustment

14. AFC Offset Adjustment (RV-7 board)

(1) Supply the VTR with the colour bar signal and set up the RECORD mode.
(2) Connect the oscilloscope to pin 16 of IC012.
(3) Adjust R015 so that off-set level of A CH and B CH are equal. (See Fig. 5-36.)

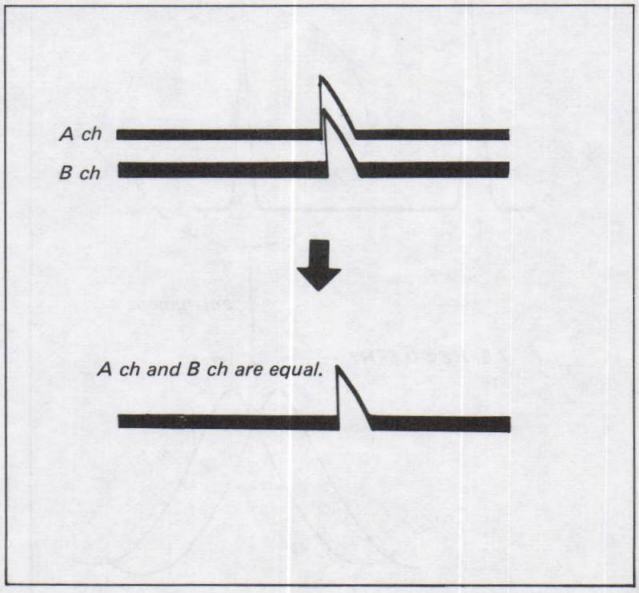

Fig. 5-36. AFC offset adjustment

www.freeservicemanuals.info

15. Carrier Balance Adjustment (RV-7 board)

(1) Supply the colour bar signal and set up the E-E mode.
(2) Connect the spectrum analyzer to pin 8 of IC012.
(3) Adjust RV013 for minimum level of carrier lead section (5.12MHz). (See Fig. 5-37.)

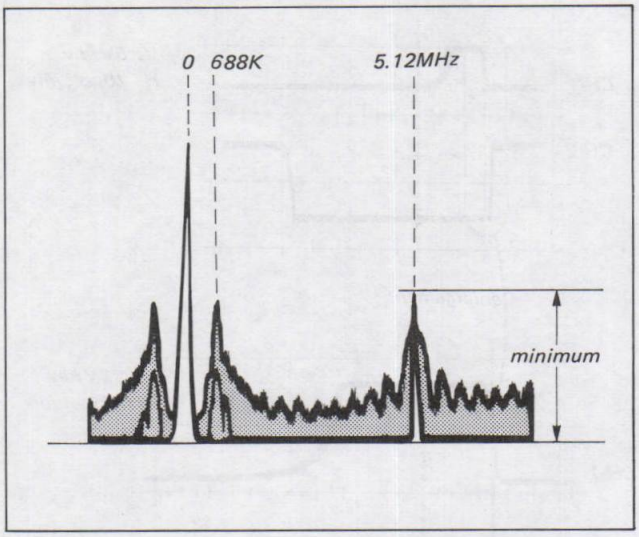

Fig. 5-37 Carrier balance adjustment

16. Pilot Burst Adjustment (RV-7 board)

(1) Supply the VTR with the colour bar signal and set up the E-E mode.
(2) Connect the oscilloscope to pin 8 of IC009.
TRIG: EXT (pin 12 of IC003)
(3) Adjust RV011 so that the level of the chroma signal becomes equal to the one of the burst signal. (See Fig. 5-38.)

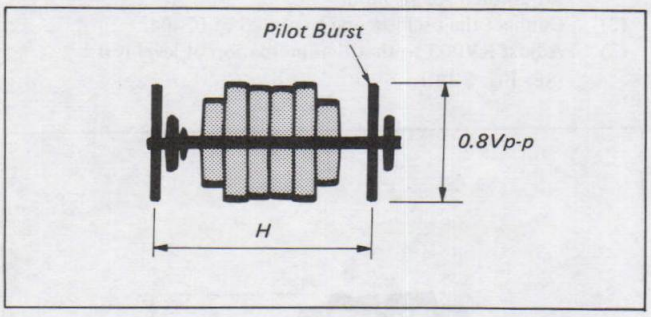

Fig. 5-38. Pilot burst adjustment

17. Expand Adjustment (RV-7 board)

(1) Play back the colour bar signal from the alignment tape.
(2) Connect the digital voltmeter to the points shown in Fig. 5-39.
(3) Adjust RV019 for 0.40V dc ± 0.01V dc.

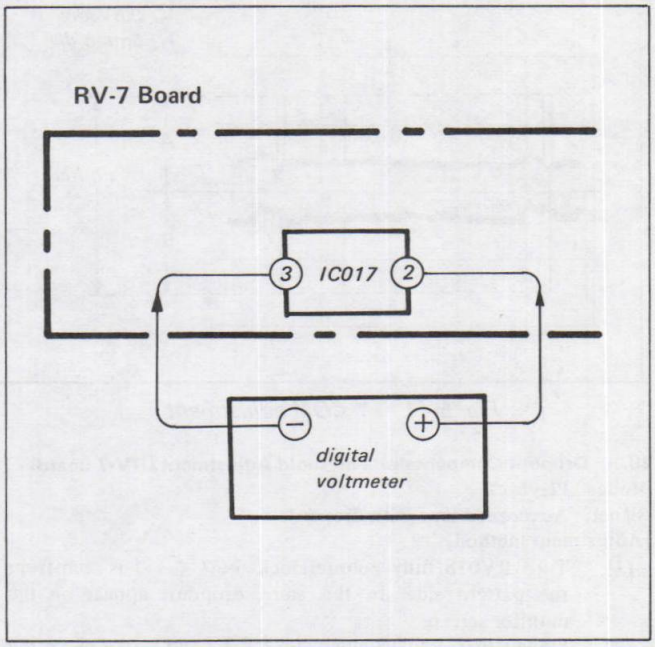

Fig. 5-39. Expand adjustment

18. Playback Y Signal Level Adjustment (RV-7 board)

(1) Play back the colour bar signal from the alignment tape.
(2) Connect the oscilloscope to VIDEO OUT.
(3) Adjust RV020 for 1.0V ± 0.05Vp-p. (See Fig. 5-40.)

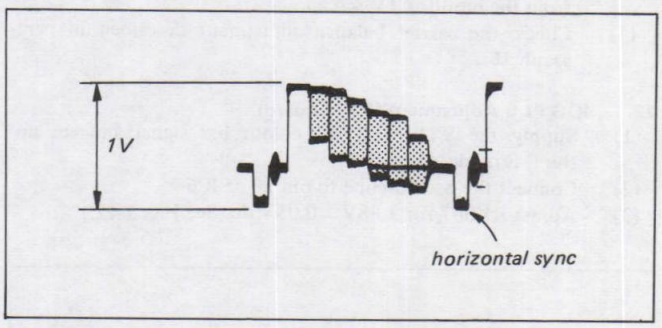

Fig. 5-40. Playback Y signal level adjustment

www.freeservicemanuals.info

19. Y COMB Adjustment (RV-7 board)

(1) Play back the colour bar signal from the alignment tape.
(2) Connect the oscilloscope to pin 8 of IC002.
(3) Adjust RV001 so that the level of A and B are equal. (See Fig. 5-41.)

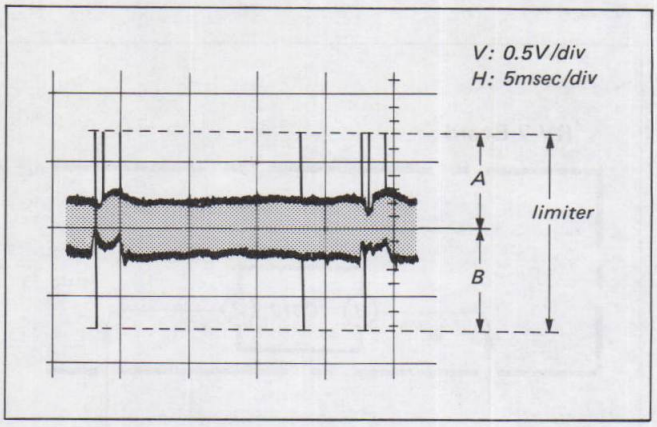

Fig. 5-41. Y COM adjustment

20. Dropout Compensator Threshold Adjustment (RV-7 board)

Mode: Playback
Signal: A recorded tape with dropouts
[Adjustment method]

(1) Turn RV018 fully counterclockwise (↺) as seen from the pattern side. In this state, dropouts appear on the monitor screen.
(2) Slowly turn RV018 clockwise (↻) and set to make the dropouts disappear.
(3) Rewind the tape and verify that the dropouts described in (1) above have disappeared.

21. Comb Filter Adjustment (RV-7 board)

(1) Supply the VTR with the colour bar signal and set up the E-E mode.
(2) Connect the oscilloscope to junction of R084 and R085.
(3) Adjust LV001 and RV012 until black stripes disappear from the monitor TV screen.
(4) Check the carrier balance adjustment described in paragraph **15**.

22. JOG PLL Adjustment (RV-7 board)

(1) Supply the VTR with the colour bar signal and set up the E-E mode.
(2) Connect the oscilloscope to pin 28 of IC6.
(3) Adjust RV007 for 3.88V ± 0.05V dc (See Fig. 5-42.)

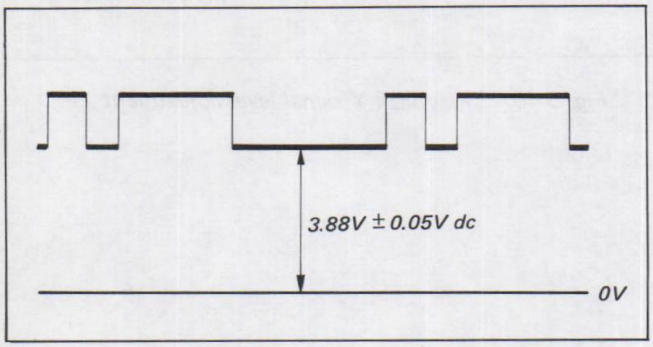

Fig. 5-42. JOG PLL adjustment

23. CF. T Adjustment (RV-7 board)

(1) Play back the colour bar signal from the alignment tape.
(2) Connect the oscilloscope as follows.
CH-1 . . . pin 13 of IC6
CH-2 . . . pin 16 of IC6
(3) Adjust as follows with RV008.
(See Fig. 5-43.)

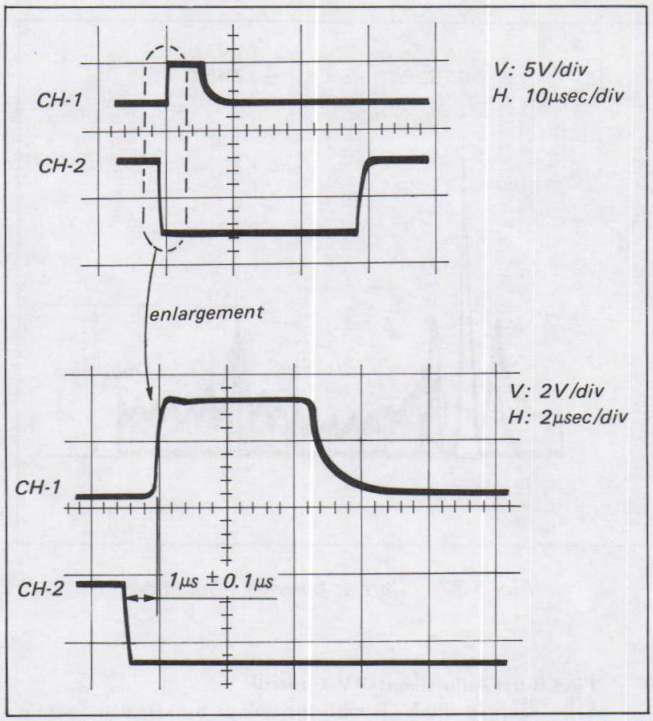

Fig. 5-43. CF. T adjustment

24. EXCH. C. Adjustment (RV-7 board)

(1) Play back the colour bar segment of alignment tape and set up the PAUSE mode.
(2) Connect the oscilloscope to pin 25 of IC004.
(3) Adjust RV005 so that the fluctuation of level is 0 ± 2%. (See Fig. 5-44.)

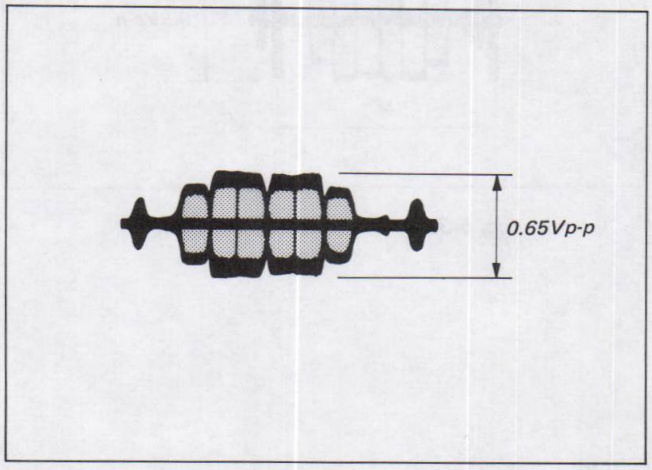

Fig. 5-44. EXCH. C. adjustment

www.freeservicemanuals.info

25. SHIFT Adjustment (RV-7 board)

(1) Connect pin 26 of IC005 and ground with a jumper wire.
(2) Play back the colour bar segment of alignment tape.
(3) Connect the oscilloscope to pin 12 of IC005.
TRIG: EXT (pin 12 of IC003)
(4) Adjust as follows with RV006.
(See Fig. 5-45.)

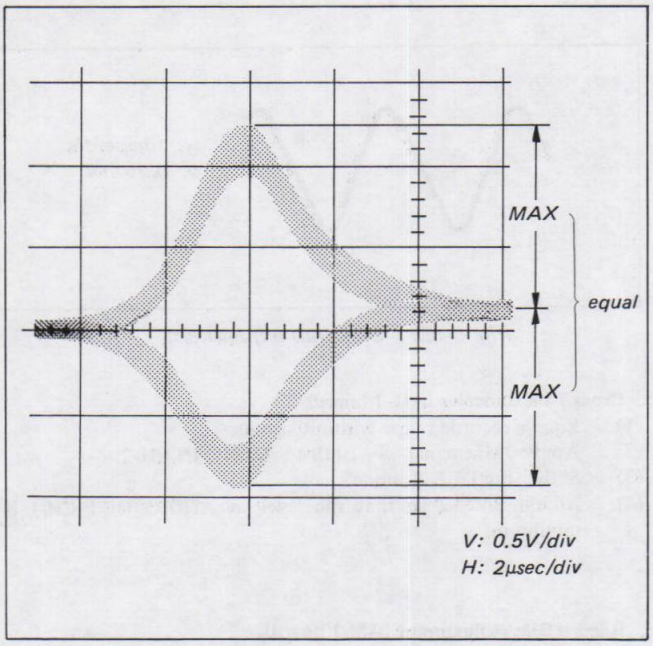

Fig. 5-45. SHIFT adjustment

[RP-7 board]

1. Playback Amplifier Frequency Response Adjustment (RP-7 board)

(1) Play back the RF sweep segment of the alignment tape.
(2) Connect the oscilloscope to TP1 (pin 3 of CN703).
TRIG: EXT (TP3, pin 5 of CN703)
(3) Increase the output level to maximum with the TRACKING knob.
(4) Set the trigger slope to – (+).
(5) Adjust RV701 so that 5.2MHz of A-ch is 400mV ± 20mV p-p.
(6) Adjust RV704 so that 2MHz of A-ch and B-ch are equal.
(7) Adjust RV705 so that 5.2MHz of B-ch is 400mV ± 20mV p-p.
(8) Verify that the level of 2MHz is 720mV ± 30mVp-p. (See Fig. 5-46.)

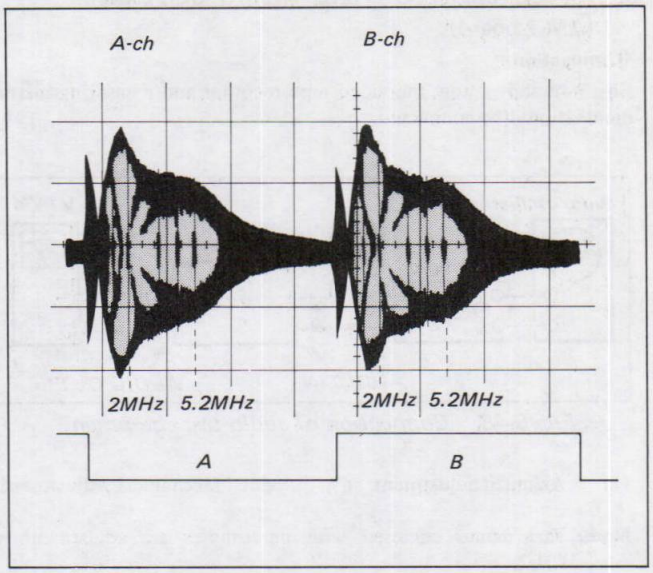

Fig. 5-46. Playback amplifier frequency response adjustment

2. Playback Y, A'-ch Frequency Response Adjustment (RP-7 board)

(1) Play back the RF sweep segment of the alignment tape.
(2) Depress the PAUSE button.
(3) Connect the oscilloscope to TP1 (pin 3 of CN703).
TRIG: EXT (TP3, pin 5 of CN703)
(4) RP-7 board: pin 1 of CN703 to GND
RL-6 board: pin 1 of CN010 to 5V
(5) Increase the output level to maximum with the TRACKING knob.
(6) Set the trigger slope to (+).
(7) Adjust RV702 and RV703 so that A'ch level is equal to A-ch.
RV702: 2MHz adjustment
RV703: 5.2MHz adjustment

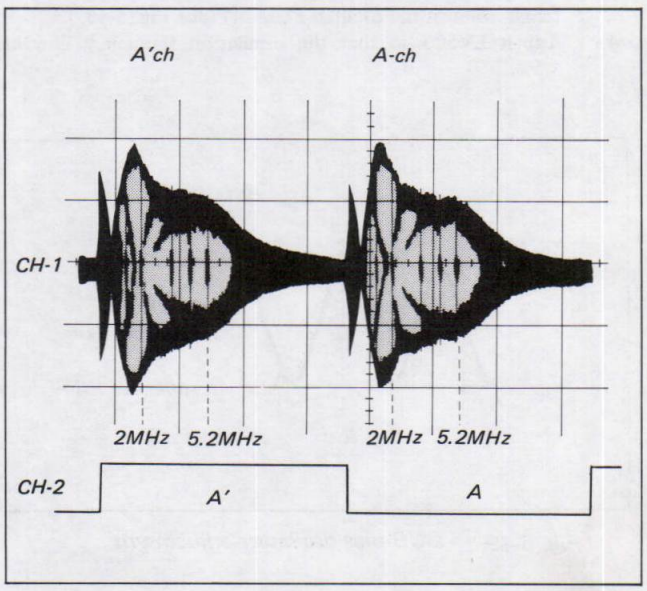

Fig. 5-47. Playback Y, A'-ch frequency response adjustment

www.freeservicemanuals.info

5-5. ADJUSTMENT OF THE AUDIO SECTION (AM-1 board)

[Connection]

Fig. 5-48 shows how the video tape recorder and measuring instruments should be connected.

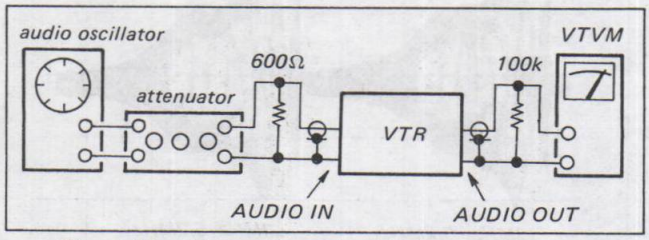

Fig. 5-48. Connection of audio test equipment

(1) Azimuth adjustment . . . . . See "Mechanical Adjustment"

Note: Part names enclosed with parentheses are adjustment of CH-2.
Set the BNR switch to OFF during adjustment of the audio system. (except for BNR adjustment)

1. Playback Frequency Characteristic Adjustment (AM-1 board)

(1) Play back the 333Hz signal of alignment tape and write down the output level.
(2) Play back the 5kHz signal of the alignment tape.
(3) Adjust RV510 (RV511) so that the output level at 5kHz is 0 ± 0.5dB relative to the 333Hz output level.

2. Playback Level Adjustment (AM-1 board)

(1) Play back 333Hz from the alignment tape and adjust so that the output level is −25dB ± 0.3dB with RV508 (RV509).

3. DUB Bias Oscillator Frequency Check (AM-1 board)

(1) Apply zero signal (zero the audio oscillator's output with maximum attenuation).
(2) Load a cassette tape and set up the DUB mode of L and R.
(3) Connecting a micro-inductor of approximately 33mH to a frequency counter, bring this close to TP505 (the shielded transformer of the oscillator circuit) (See Fig. 5-49.).
(4) Adjust LV503 so that the oscillation frequency is 65kHz ± 5%.

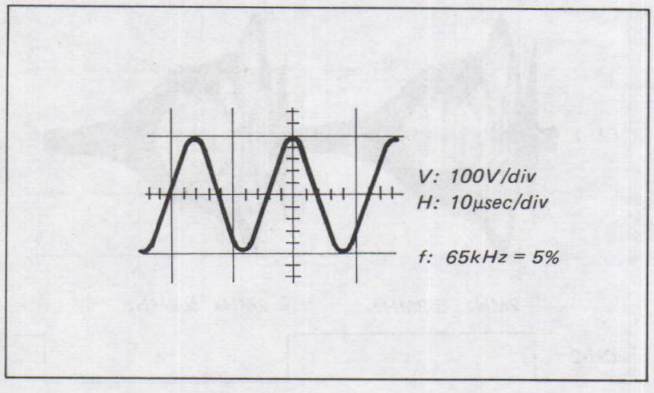

Fig. 5-49. DUB bias oscillator adjustment

4. Bias Trap Adjustment (AM-1 board)

(1) Apply zero signal (zero the audio oscillator's output level with maximum attenuation).

Note: Be sure to tighten the shield case properly when adjusting.

(2) Load a cassette tape and put the recorder in Record mode.
(3) Connect an oscilloscope to TP506 (TP507).
(4) Minimize bias leak with LV501 (LV502).
Requirement: minimum level at 0.7Vp-p or less.

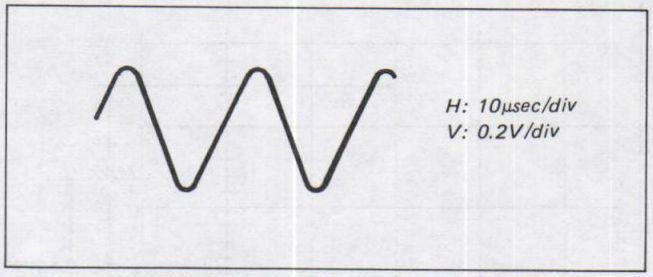

Fig. 5-50. Bias trap adjustment

5. Cross Talk Canceler (AM-1 board)

(1) Load a recorded tape without signals.
(2) Apply 3kHz signal of −10dB to AUDIO IN CH-2.
(3) Set up the DUB R mode.
(4) Adjust RV512 so that the level of AUDIO OUT CH-1 is minimum.

6. Record Bias Adjustment (AM-1 board)

Check that "Playback frequency characteristic adjustment" has been made.
(1) Connect TP500 and ground with a jumper wire so as to turn off the AGC operation.
(2) Supply a 333Hz signal.
(3) Set up the E-E mode and adjust the oscillator output level so that the level meter reading is −40dB.
(4) Record signals.
(5) Supply a frequency of 7kHz and perform Steps (3) and (4) above.
(6) Play back the recorded section of the tape and check that the output level at 7kHz is +1.5dB ± 0.5dB relative to the output level at 333Hz. If the level is outside this range, repeat Steps (2) through (5) adjusting with CT501 (CT502) until the standard is met.
(7) Remove the jumper wire after making the adjustment.

7. Record Level Adjustment (AM-1 board)

(1) Connect TP500 and ground with a jumper wire so as to turn off the AGC operation.
(2) Supply a 333Hz signal.
(3) Set up the E-E mode and adjust the oscillator output level so that the level meter reading is −40dB.
(4) Record signals.
(5) Play back the recorded section of the tape and check that the output level is −25dB ± 0.5dB. If the level is outside this range, repeat Steps (2) through (4) above adjusting with RV506 (RV507) until the standard value is obtained.
(6) Verify that the record current adjustment has been completed.
(7) Remove the jumper wire after making the adjustment.

www.freeservicemanuals.info

8. AGC Balance (AM-1 board)

(1) Apply 333Hz signal of 0dB to Audio input of CH-1 and CH-2.
(2) Set up the E-E mode.
(3) Adjust RV501 so that the difference between the output level of CH-1 and the one of CH-2 is within 0 ± 0.3dB.

9. BNR Adjustment (AM-1 board)

(1) Turn on the BNR switch.
(2) Load the cassette tape, and set up the PLAYBACK PAUSE mode.
(3) Apply 1 kHz signals to TP514 and TP515.
(4) Connect VTVM to TP516, Pin 5 of IC506 (TP517, Pin 5 of IC508).
Note: Connect for respective frequencies.
(5) Adjust the attenuator to bring VTVM to −5dB.
(6) Connect VTVM to LINE OUT CH-1 (CH-2).
(7) Adjust RV505 (RV502) to bring VTVM to −5dB.
(8) Adjust the input signal of TP514 (TP515) to 10kHz, and repeat (4), (5) and (6).
(9) Adjust RV504 (RV503) to bring VTVM to −5dB.
(10) Repeat (3) through (6) and (8), and ensure that −5.0 ± 0.5dB is obtained for both 1 kHz and 10 kHz signals.
Where the value is unsatisfactory with process (10), repeat (3) through (9) until a satisfactory value is obtained with process (10).

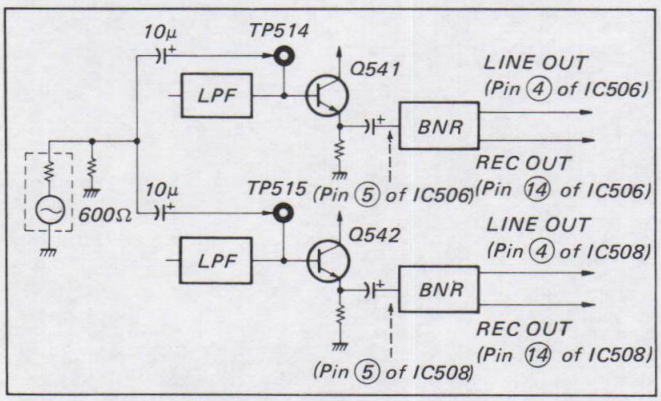

Fig. 5-51. BNR adjustment

10. BNR Characteristic Check (AM-1 board)

[Playback]

(1) Disconnect CN001 and turn on the BNR switch.
(2) Input 1 kHz signals to TP514 (TP515).
(3) Load the cassette tape, and set up the PLAYBACK PAUSE mode. (Input signals: 70Hz, 1kHz and 10kHz)
(4) Connect VTVM to TP516, Pin 5 of IC506 (TP517, Pin 5 of IC508).
Note: Connect for respective frequencies.
(5) Adjust the attenuator to bring VTVM to −35dB.
(6) Connect VTVM to LINE OUT CH-1 (CH-2).
(7) Execute (3) through (6) for respective frequencies, and ensure that VTVM levels are as follows.

TP514 (TP515) input signal	LINE OUT CH-1 (CH-2) output signal
70Hz	−45.5dB ± 2.0dB
1kHz	−50.4dB ± 2.0dB
10kHz	−57.8dB ± 3.0dB

[Recording]

(1) Turn on the BNR switch.
(2) Set up the STOP mode, and set the INPUT SELECT switch to LINE.
(3) Input 70Hz, 1 kHz and 10 kHz signals to TP514 (TP515).
(4) Connect VTVM to TP516, Pin 5 of IC506 (TP517, Pin 5 of IC508).
(5) Adjust the attenuator until VTVM level becomes −35dB.
Note: Make this adjustment for each input frequency.
(6) Connect VTVM to Pin 14 of IC506 (Pin 14 of IC508).
(7) Execute (3) through (6) for all input frequencies, and ensure that the VTVM levels are as shown below.

TP514 (TP515) input signal	LINE OUT CH-1 (CH-2) output signal
70Hz	−26.0dB ± 2.0dB
1kHz	−22.9dB ± 2.0dB
10kHz	−23.9dB ± 2.0dB

11. Overall Frequency Characteristics Check (AM-1 board)

(1) Terminate the audio line output terminal with a 100kΩ resistor, and connect to VTVM. (Leave AGC turned off.)
(2) Input 333Hz signals to the audio line input terminal.
Note: Keep BNR turned off.
(3) Adjust the attenuator until VTVM becomes −25dB.
(4) Record for 5 seconds counted by the tape counter.
(5) Repeat (4) by changing the frequency to 50 Hz, 100 Hz, 333 Hz, 7 kHz, and 10 kHz.
(6) Playback the recorded tape, and check the recorded level conforms with the specifications.

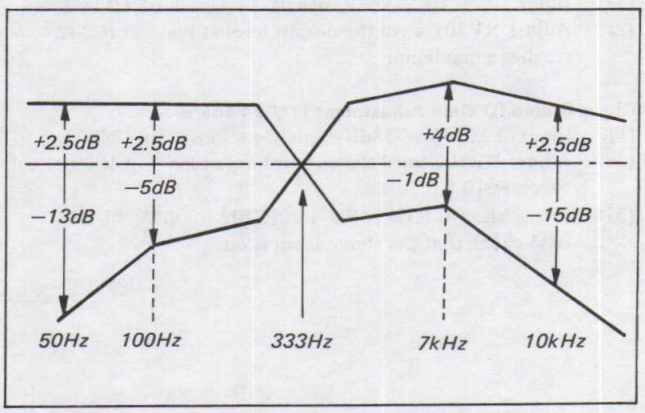

Fig. 5-52. Overall frequency characteristics check

12. Overall S/N Check (AM-1 board)

(1) Terminate the audio line output terminal by a 100kΩ resistor, and connect up VTVM.
(2) Short the audio input line, and record for 5 seconds, as counted by the tape counter.
(3) Input 333 Hz −10dB signals to the audio input line, and record for 5 seconds, as counted by the tape counter.
(4) Playback the recorded tape, and ensure that the difference in VTVM level between portions (2) and (3) is within the following values.

BNR off: 32 dB min.
BNR ON: 42 dB min.

www.freeservicemanuals.info

13. Overall Distortion Ratio Check (AM-1 board)

(1) Connect a distortion meter to the audio line output terminal.
(2) Input 400 Hz −10dB signals to the audio line input terminal, and record for 10 seconds, as counted by the tape counter.
(3) Playback the tape, and ensure that the distortion ratio is below 4%.

5-7. ADJUSTMENT OF THE TIMER BLOCK (TM-31 BOARD)

1. Clock Frequency Adjustment (TM-31 board)

(1) Connect a frequency counter to Pin 17 of IC201, using an FET probe. (input capacity: 2pF max., input resistance: 1MΩ min.)
(2) Adjust TC201 until the frequency counter indicates 3.072035 ± 5Hz.

5-6. ADJUSTMENT OF THE TUNER BLOCK (TU-24 BOARD)

1. AGC Adjustment (TU-24 board)

(1) Receive broadcast TV signals in the highest contrast.
(2) Turn RV001 until snow (intensity-modulated display) noise appears on the TV screen.
(3) Turn RV001 backward until the snow (intensity -modulated display) noise disappears.
(4) Receive signals of all channels in turn, and ensure that there is no cross modulation beat, image deformation nor snow noise effect.

2. Stereo ID of Adjustment (TU-24 board)

(1) Input 12.5 Hz −58dB signals to Pin 2 of CN002.
(2) Adjust RV201 until the output level at Pin 7 of IC202 reaches a maximum.

3. Stereo ID Gain Adjustment (TU-24 board)

(1) Input 12.5 Hz −58dB signals to Pin 2 of CN002.
(2) Adjust RV202 until the output level at Pin 7 of IC202 becomes 10 ± 0.5dB.
(3) Check the DC level at Pin 3 of IC202 for 2.9V ± 0.3V. Also check that the stereo lamp is on.

www.freeservicemanuals.info

SS-11 BOARD ADJUSTMENT LOCATION

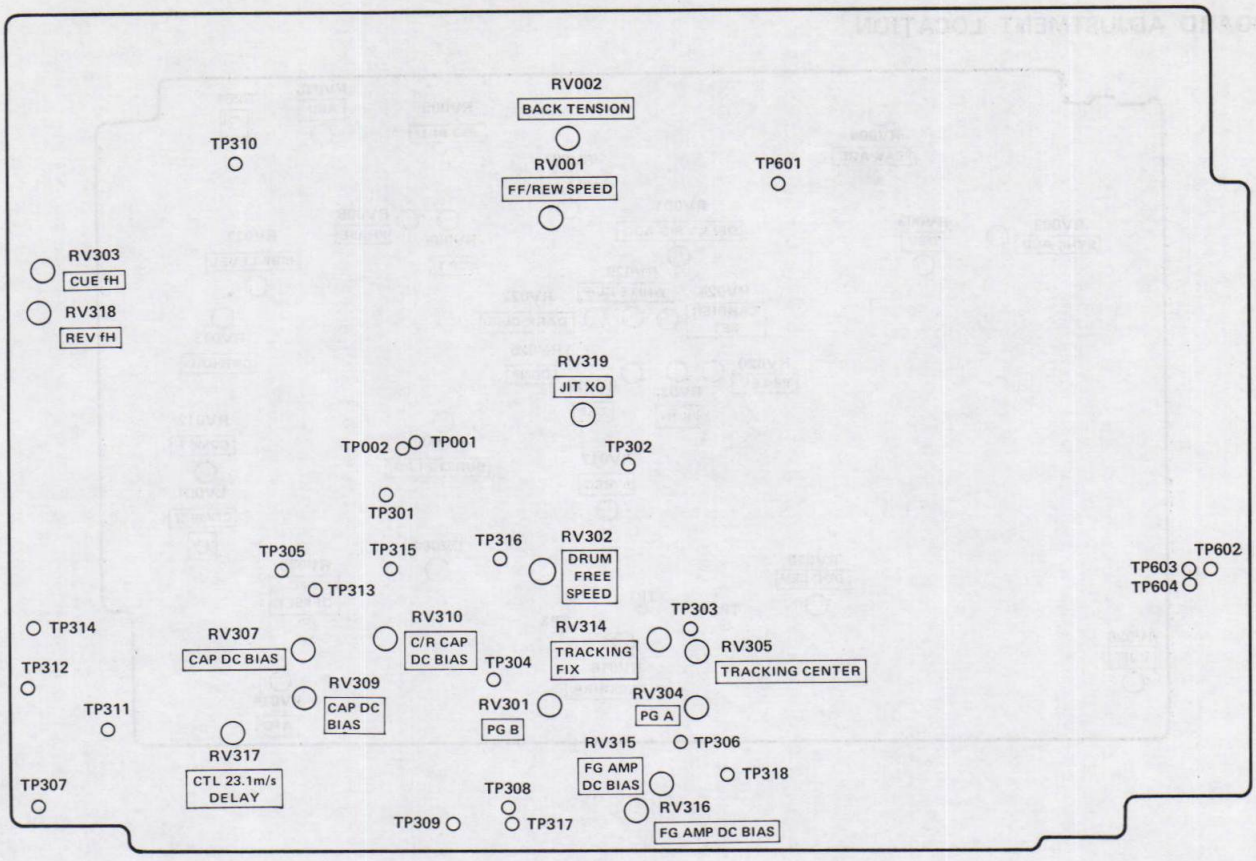

JR-1 BOARD ADJUSTMENT LOCATION

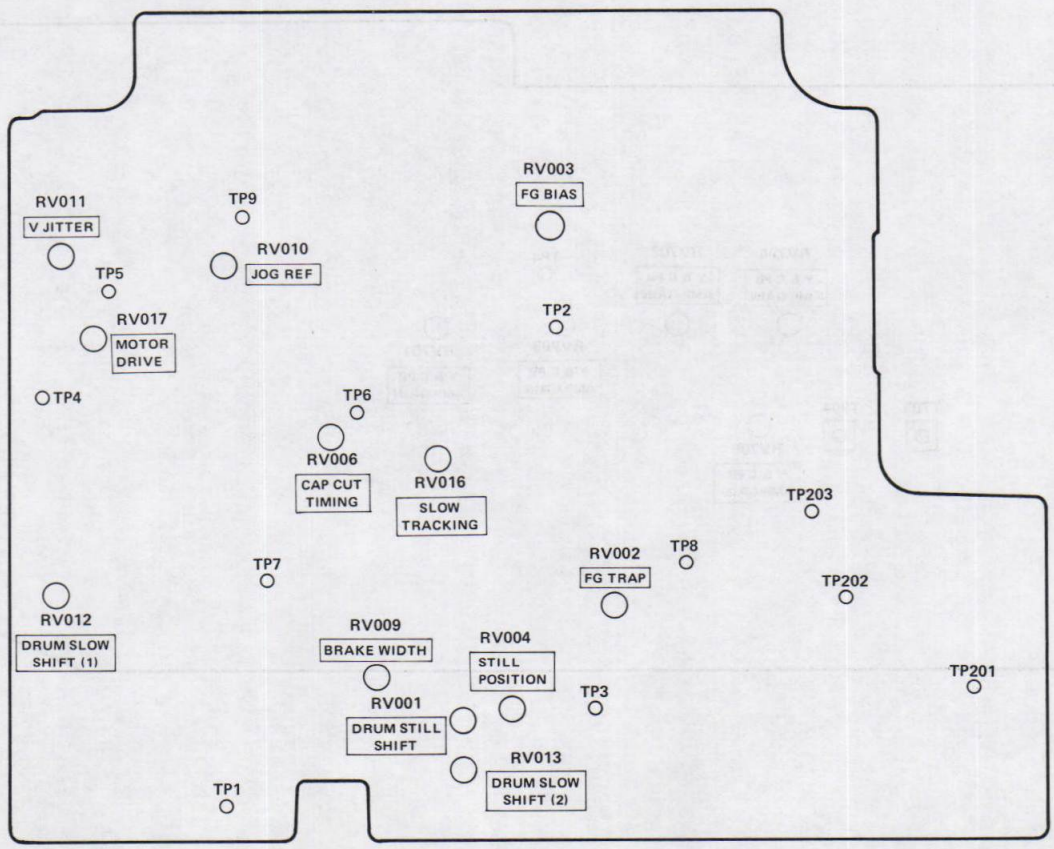

www.freeservicemanuals.info

RV-7 BOARD ADJUSTMENT LOCATION

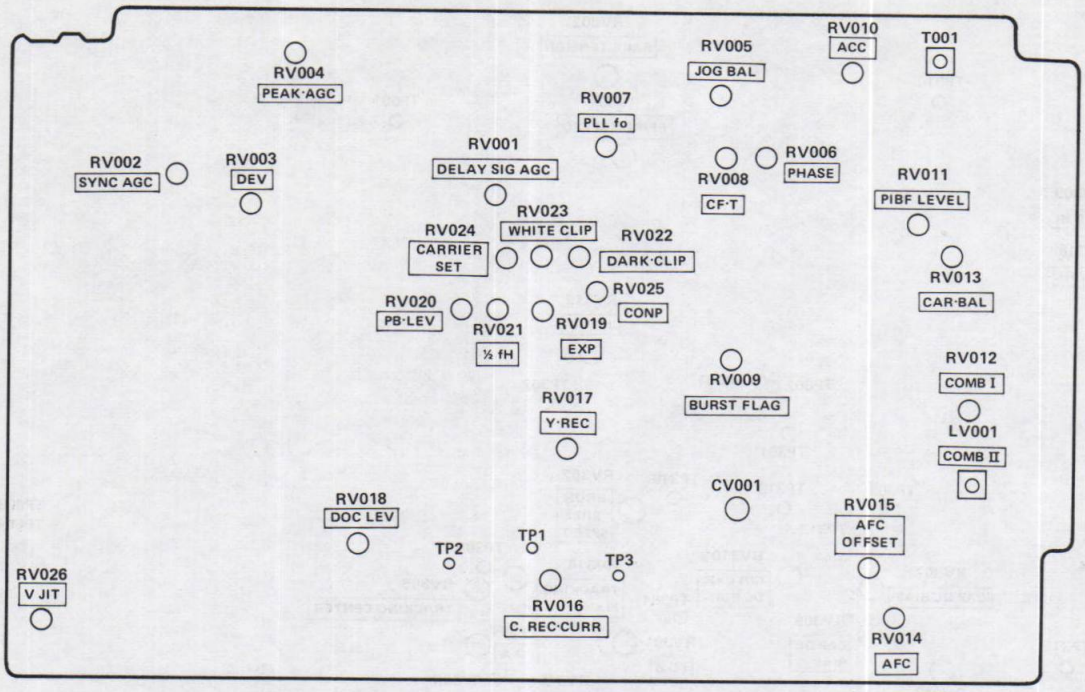

RP-7 BOARD ADJUSTMENT LOCATION

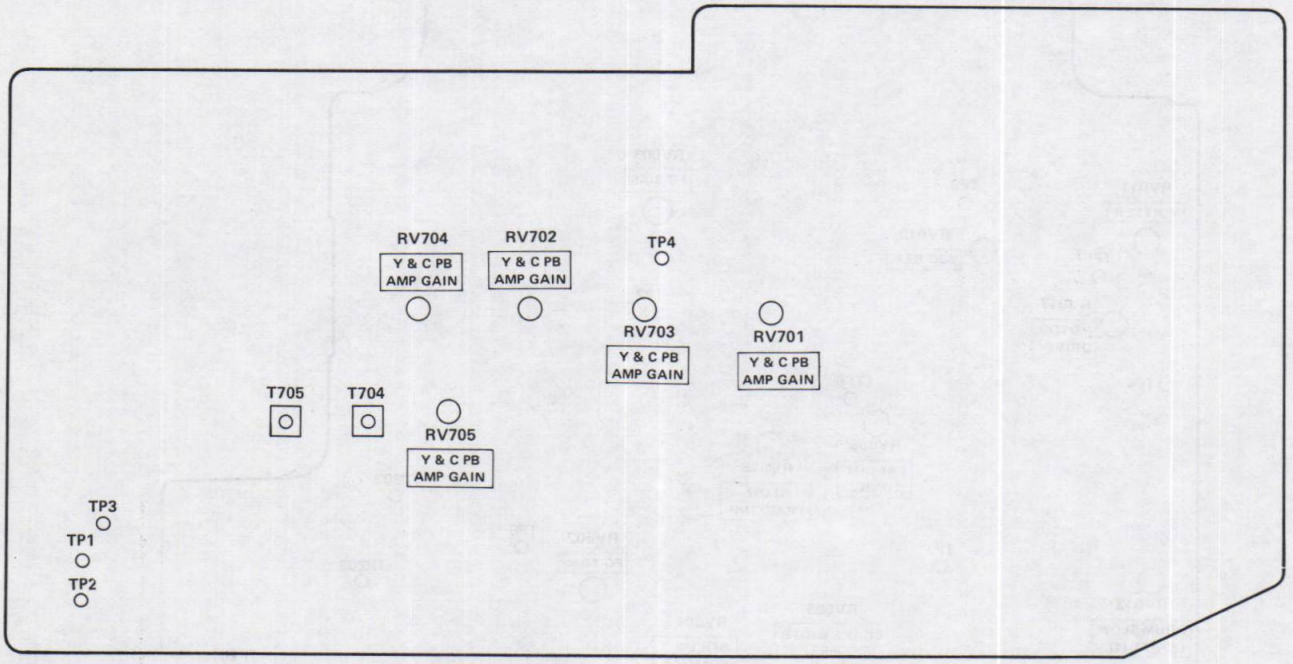

www.freeservicemanuals.info

AM-1 BOARD ADJUSTMENT LOCATION

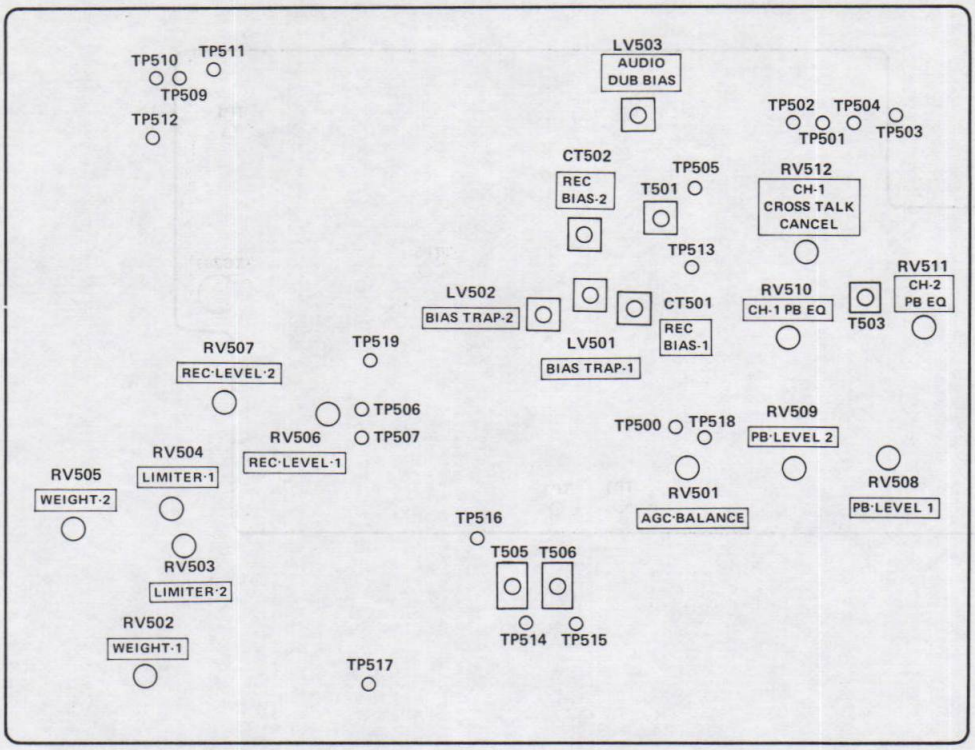

TU-24 BOARD ADJUSTMENT LOCATION

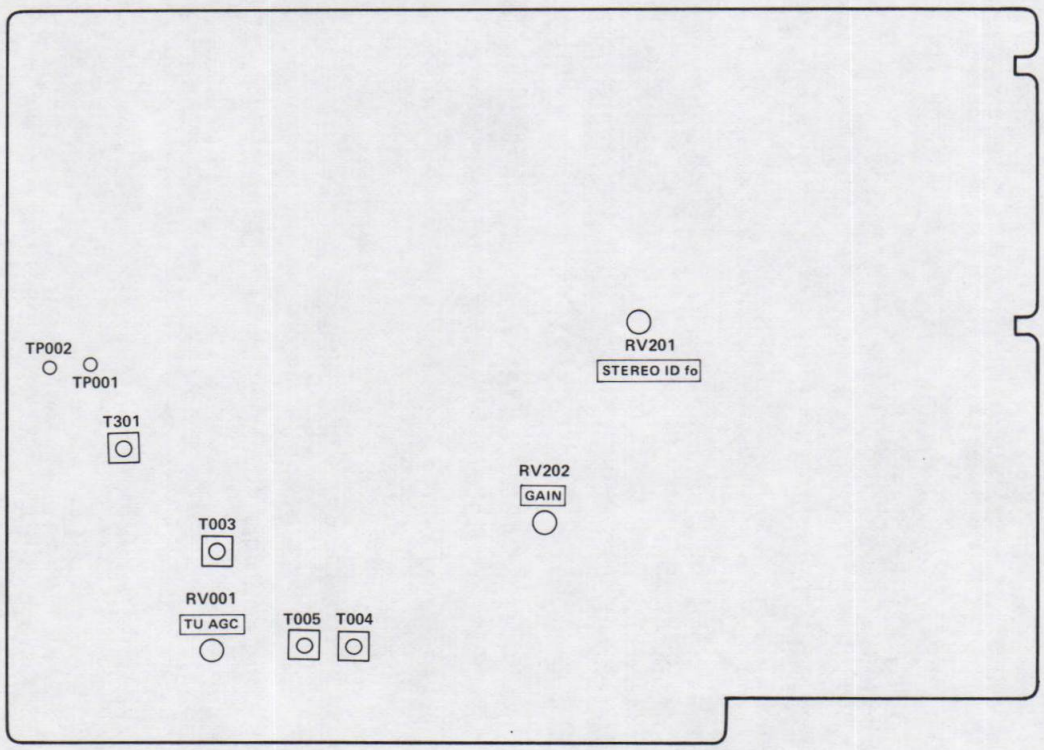

www.freeservicemanuals.info

TM-31 BOARD ADJUSTMENT LOCATION

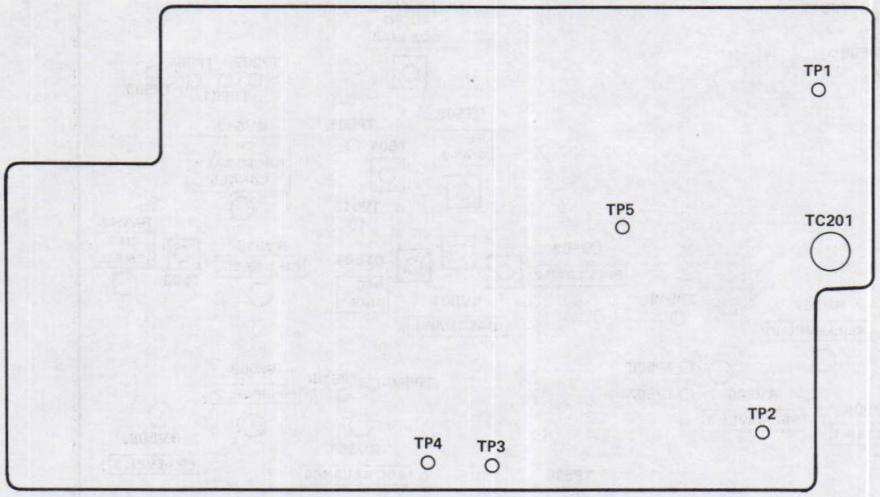

www.freeservicemanuals.info

www.freeservicemanuals.info

9-972-187-21

Sony Corporation
Audio & Video Group © 1982

English
82H0495-1
Printed in Japan

www.freeservicemanuals.info

SL-C9E

SONY®

ADJUSTMENT MANUAL

AEP Model
UK Model
E Model

SUPPLEMENT-1

Subject:
- **Adjustment procedures are partly changed accompanying modifications in the audio circuits.**
- **Errors involved in some adjustment procedures are corrected below.**

This supplement updates the adjustment manual to include production changes.

Note: Refer to the SL-C9E adjustment manual for related information not containd in this supplement.

File this supplement with adjustment manual.

HABOCO
Servicecentrum voor radio - televisie-
video app. en ... instrumenten
Ovenbouwers ... 055 - 335814
7328 JM ... ORN
BUREAU VAN DER STAP
DIESERSTRAAT 17
7201 NA ZUTPHEN
TEL.: 05750-15715
K.v.K. ZUTPHEN 43369

MICROFILM

Consumer VIDEO

www.freeservicemanuals.info

(A) SL-C9E

Ser. No. 208,451 – 208,500
224,486 – 226,000
228,945 – 230,300
230,501 – 235,500
235,592 – 240,999

SL-C9UB

Ser. No. 215,501 – 217,000
224,486 – 226,000
228,945 – 241,000

Page 52

5-5. ADJUSTMENT OF THE AUDIO SECTION (AM-1 board)

[Connection]

Fig. 5-48 shows how the video tape recorder and measuring instruments should be connected.

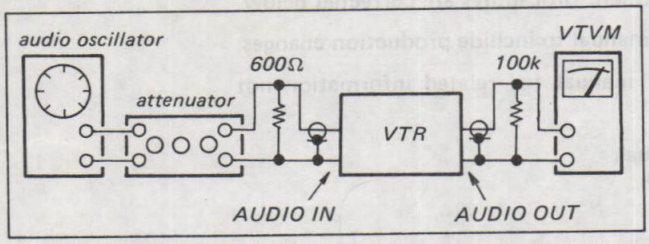

Fig. 5-48. Connection of audio test equipment

(1) Azimuth adjustment . . . . . See "Mechanical Adjustment"

Note: Part names enclosed with parentheses are adjustment of CH-2.
Set the BNR to OFF during adjustment of the audio system. (except for BNR adjustment)

[Connection]

BNR OFF: Connect the point where R516 and R520 meets to GND with a jumper.

Page 53

12. Overall S/N Check (AM-1 board)

(1) Terminate the audio line output terminal by a 100kΩ resistor, and connect up VTVM.
(2) Short the audio input line, and record for 5 seconds, as counted by the tape counter.
(3) Input 333 Hz −10dB signals to the audio input line, and record for 5 seconds, as counted by the tape counter.
(4) Playback the recorded tape, and ensure that the difference in VTVM level between portions (2) and (3) is within the following values.

BNR SW OFF: 34dB min
(for slight BNR effect)
BNR SW ON: 42dB min

(B) SL-C9E, SL-C9UB

Ser. No. 241,001 and later

Page 52

5-5. ADJUSTMENT OF THE AUDIO SECTION (AM-1 board)

[Connection]

Fig. 5-48 shows how the video tape recorder and measuring instruments should be connected.

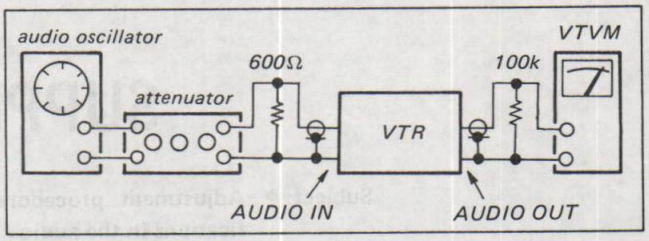

Fig. 5-48. Connection of audio test equipment

(1) Azimuth adjustment . . . . . See "Mechanical Adjustment"

Note: Part names enclosed with parentheses are adjustment of CH-2.
Set the BNR to OFF during adjustment of the audio system. (except for BNR adjustment)

[Connection]

BNR OFF: Connect TP-520 to GND with a jumper.

4. Bias Trap Adjustment (AM-1 board)

(1) Apply zero signal (zero the audio oscillator's output level with maximum attenuation).

Note: Be sure to tighten the shield case properly when adjusting.

(2) Load a cassette tape and put the recorder in Record mode.
(3) Connect an oscilloscope to TP506 (TP507).
(4) Minimize bias leak with LV501 (LV502).
Requirement: minimum level at 6Vp-p or less.

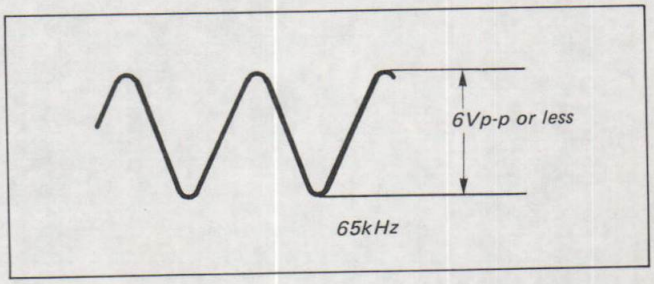

Fig. 5-50. Bias trap adjustment

www.freeservicemanuals.info

12. Overall S/N Check (AM-1 board)

(1) Terminate the audio line output terminal by a 100kΩ resistor, and connect up VTVM.

(2) Short the audio input line, and record for 5 seconds, as counted by the tape counter.

(3) Input 333 Hz −10dB signals to the audio input line, and record for 5 seconds, as counted by the tape counter.

(4) Playback the recorded tape, and ensure that the difference in VTVM level between portions (2) and (3) is within the following values.

BNR SW OFF: 34dB min
(for slight BNR effect)
BNR SW ON: 42dB min

www.freeservicemanuals.info

CORRECTION

• ☚ : corrected portion

4-2. ADJUSTMENT FOR REMOVAL OR REPLACEMENT OF THE ACE ASSEMBLY

Page 34

4-2-2. Audio head (ACE assembly) azimuth adjustment ☚

Audio head azimuth affects phase difference of the right and left channels in stereo. Since the track width is one third of monaural, azimuth loss is small when azimuth error is the same. Therefore, only phase adjustment of the two channels is to be performed as azimuth adjustment.

Mode: playback
Signal: alignment tape, color bars, 3kHz
Oscilloscope: CH-1 . . . AUDIO OUT CH1/L terminal
CH-2 . . . AUDIO OUT CH2/R terminal

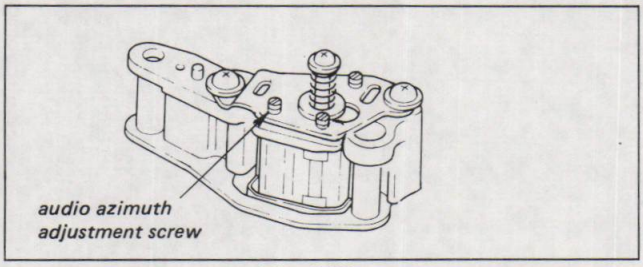

Fig. 4-12.

Adjustment procedures

1. In dual-beam mode

(1) Zero the phase difference of CH-1 and CH-2 signals with the azimuth adjusting screw.

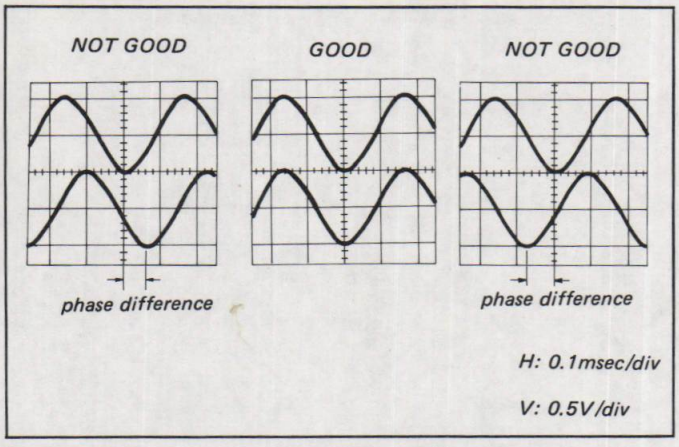

(2) Requirement on phase difference angle: less than 45°

2. In X-Y mode with Lissajous' figures

(1) Zero the phase difference of CH-1 and CH-2 signals with the azimuth adjusting screw.

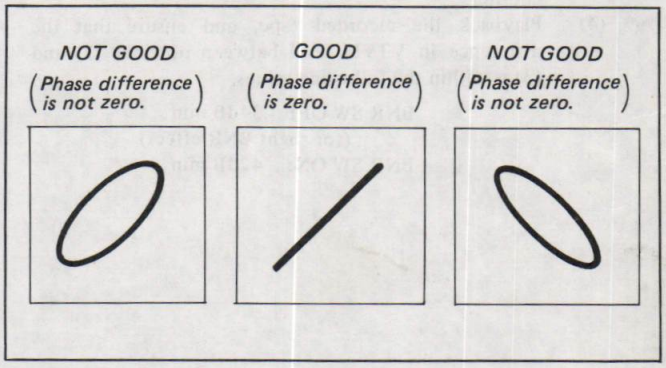

(2) Requirement on phase difference angle: less than 45°

The angle of phase difference is given by $\sin^{-1}$ (B/A). To meet that the angle of phase difference be less than 45°, it is sufficient that B/A < 0.7.

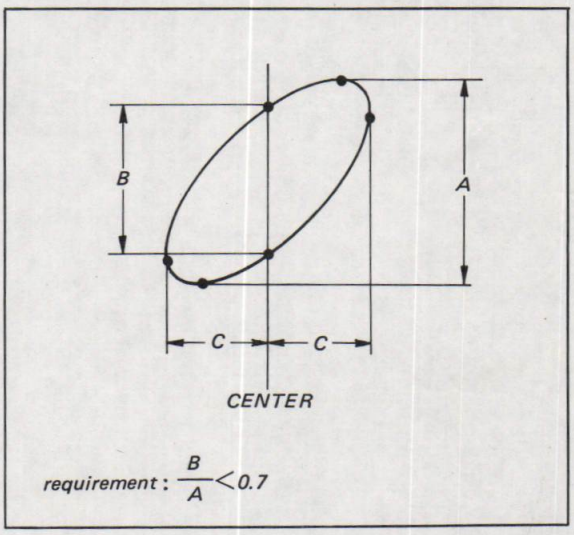

www.freeservicemanuals.info

(C) SL-C9E (Excluding SL-C9UB)
Ser. No. 236,501 and later

Page 54

5-6. ADJUSTMENT OF THE TUNER BLOCK (TU-24 board)

2. Stereo ID of Adjustment (TU-24 board)

(1) Input 12.5 Hz −49dB signals to Pin 2 of CN002.
(2) Adjust RV201 until the output level at Pin 7 of IC202 reaches a maximum.

3. Stereo ID Gain Adjustment (TU-24 board)

(1) Input 12.5 Hz −49dB signals to Pin 2 of CN002.
(2) Adjust RV202 until the output level at Pin 7 of IC202 becomes 10 ± 0.5dB.
(3) Check the DC level at Pin 3 of IC202 for 2.9V ± 0.3V. Also check that the stereo lamp is on.

Page 52

5-5. ADJUSTMENT OF THE AUDIO SECTION (AM-1 board)

2. Playback Level Adjustment (AM-1 board)

(1) Play back 333Hz from the alignment tape and adjust so that the output level is −23 ± 0.3dB with RV508 (RV509).

7. Record Level Adjustment (AM-1 board)

(1) Connect TP500 and ground with a jumper wire so as to turn off the AGC operation.
(2) Supply a 333Hz signal.
(3) Set up the E-E mode and adjust the oscillator output level so that the level meter reading is −40dB.
(4) Record signals.
(5) Play back the recorded section of the tape and check that the output level is −23 ± 0.5dB. If the level is outside this range, repeat Steps (2) through (4) above adjusting with RV506 (RV507) until the standard value is obtained.
(6) Verify that the record current adjustment has been completed.
(7) Remove the jumper wire after making the adjustment.

Page 53

11. Overall Frequency Characteristics Check (AM-1 board)

(1) Terminate the audio line output terminal with a 100kΩ resistor, and connect to VTVM. (Leave AGC turned off.)
(2) Input 333Hz signals to the audio line input terminal.
Note: Keep BNR turned off.
(3) Adjust the attenuator until VTVM becomes −23dB.
(4) Record for 5 seconds counted by the tape counter.
(5) Repeat (4) by changing the frequency to 50 Hz, 100 Hz, 333 Hz, 7 kHz, and 10 kHz.
(6) Playback the recorded tape, and check the recorded level conforms with the specifications.

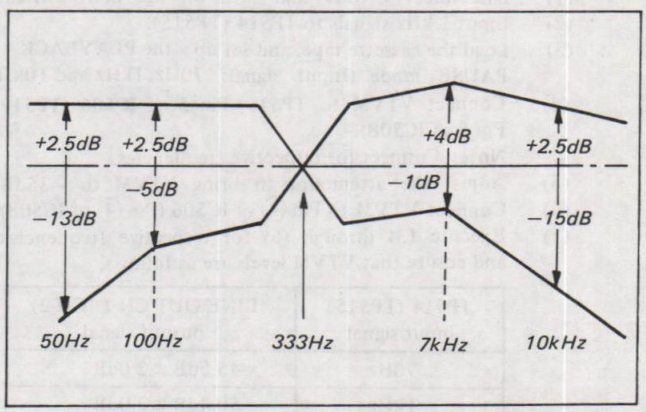

Fig. 5-52. Overall frequency characteristics check

www.freeservicemanuals.info

5-5. ADJUSTMENT OF THE AUDIO SECTION (AM -1 board)

Page 53

9. BNR Adjustment (AM-1 board)

(1) Turn on the BNR switch.
(2) Load the cassette tape, and set up the PLAYBACK PAUSE mode.
(3) Apply 1 kHz signals to TP514 and TP515.
(4) Connect VTVM to TP516, Pin 5 of IC506 (TP517, Pin 5 of IC508).
Note: Connect for respective frequencies.
(5) Adjust the attenuator to bring VTVM to −5dB.
(6) Connect VTVM to Pin ④ of IC506 (Pin ④ of IC508).
(7) Adjust RV505 (RV502) to bring VTVM to −5dB.
(8) Adjust the input signal of TP514 (TP515) to 10kHz, and repeat (4), (5) and (6).
(9) Adjust RV504 (RV503) to bring VTVM to −5dB.
(10) Repeat (3) through (6) and (8), and ensure that −5.0 ± 0.5dB is obtained for both 1 kHz and 10 kHz signals.
Where the value is unsatisfactory with process (10), repeat (3) through (9) until a satisfactory value is obtained with process (10).

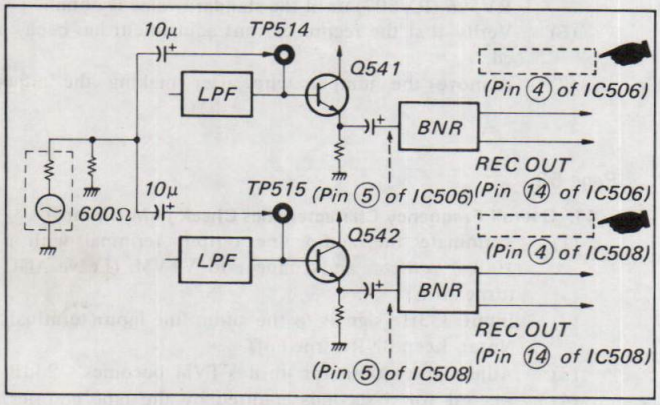

Fig. 5-51. BNR adjustment

10. BNR Characteristic Check (AM-1 board)

[Playback]

(1) Disconnect CN001 and turn on the BNR switch.
(2) Input 1 kHz signals to TP514 (TP515).
(3) Load the cassette tape, and set up the PLAYBACK PAUSE mode. (Input signals: 70Hz, 1kHz and 10kHz)
(4) Connect VTVM to TP516, Pin 5 of IC506 (TP517, Pin 5 of IC508).
Note: Connect for respective frequencies.
(5) Adjust the attenuator to bring VTVM to −35dB.
(6) Connect VTVM to Pin ④ of IC506 (Pin ④ of IC508).
(7) Execute (3) through (6) for respective frequencies, and ensure that VTVM levels are as follows.

TP514 (TP515) input signal	LINE OUT CH-1 (CH-2) output signal
70Hz	−45.5dB ± 2.0dB
1kHz	−50.4dB ± 2.0dB
10kHz	−57.8dB ± 3.0dB

[Recording]

(1) Turn on the BNR switch.
(2) Set up the STOP mode, and set the INPUT SELECT switch to LINE.
(3) Input 70Hz, 1 kHz and 10 kHz signals to TP514 (TP515).
(4) Connect VTVM to TP516, Pin 5 of IC506 (TP517, Pin 5 of IC508).
(5) Adjust the attenuator until VTVM level becomes −35dB.
Note: Make this adjustment for each input frequency.
(6) Connect VTVM to Pin 14 of IC506 (Pin 14 of IC508).
(7) Execute (3) through (6) for all input frequencies, and ensure that the VTVM levels are as shown below.

TP514 (TP515) input signal	LINE OUT CH-1 (CH-2) output signal
70Hz	−26.0dB ± 2.0dB
1kHz	−22.9dB ± 2.0dB
10kHz	−23.9dB ± 2.0dB

BUREAU VAN DER STAP
DIESERSTRAAT 17
7201 NA ZUTPHEN
TEL.: 05750-15715
K.v.K. ZUTPHEN 43369

Sony Corporation
Consumer Products Group
Technical Support Dept.

9-972-187-82

English
83A0492-1
Printed in Japan
© 1983